The Muon Trigger at DØ

Christos Leonidopoulos
Columbia University
September 3, 2001

- The DØ: Detector & Trigger
- The Muon Trigger
- Algorithms
- Status

Fermilab & RunII: The Upgraded TeVatron

$p\,(1\,\mathrm{TeV}) \rightarrow \quad \leftarrow \bar{p}\,(1\,\mathrm{TeV})$

Challenging Running Conditions Compared with RunI (1992-96)

- Luminosity: 2×10^{32} cm^{-2} s^{-1} ($\times$10 increase)
- Bunch crossing time: 396 ns ($\times$10 decrease)

132 ns or 7 MHz in RunII-b

5×10^{30} cm^{-2} s^{-1} this summer

What's new at DØ:

- New subdetectors (silicon tracker, fiber tracker, solenoid, preshowers)
- Improved muon system
- Enhanced trigger system
- Extra shielding around beamlines

Christos Leonidopoulos
Columbia University

DØ: The Upgraded Detector

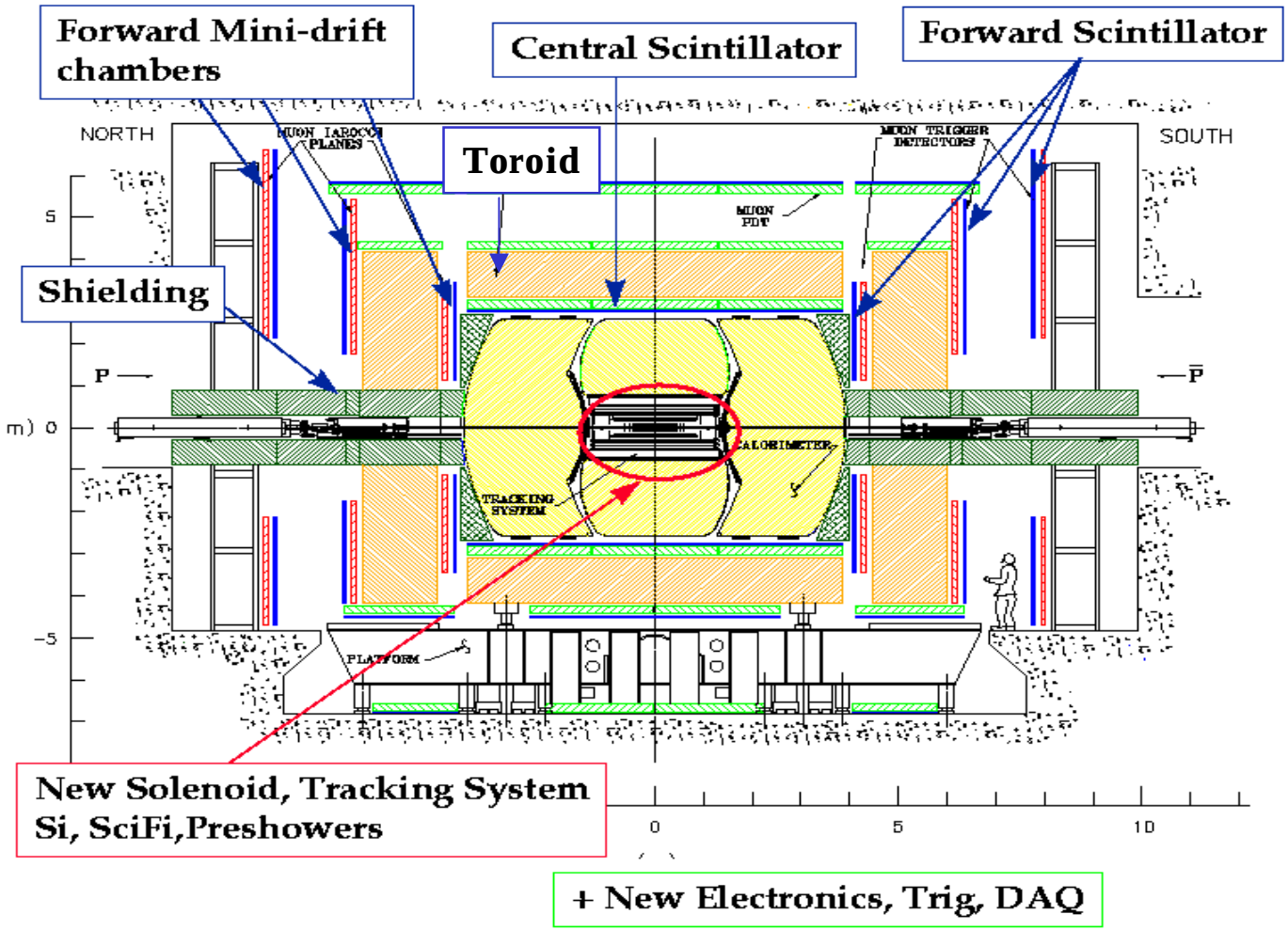

Christos Leonidopoulos
Columbia University

DØ: The Muon Detector

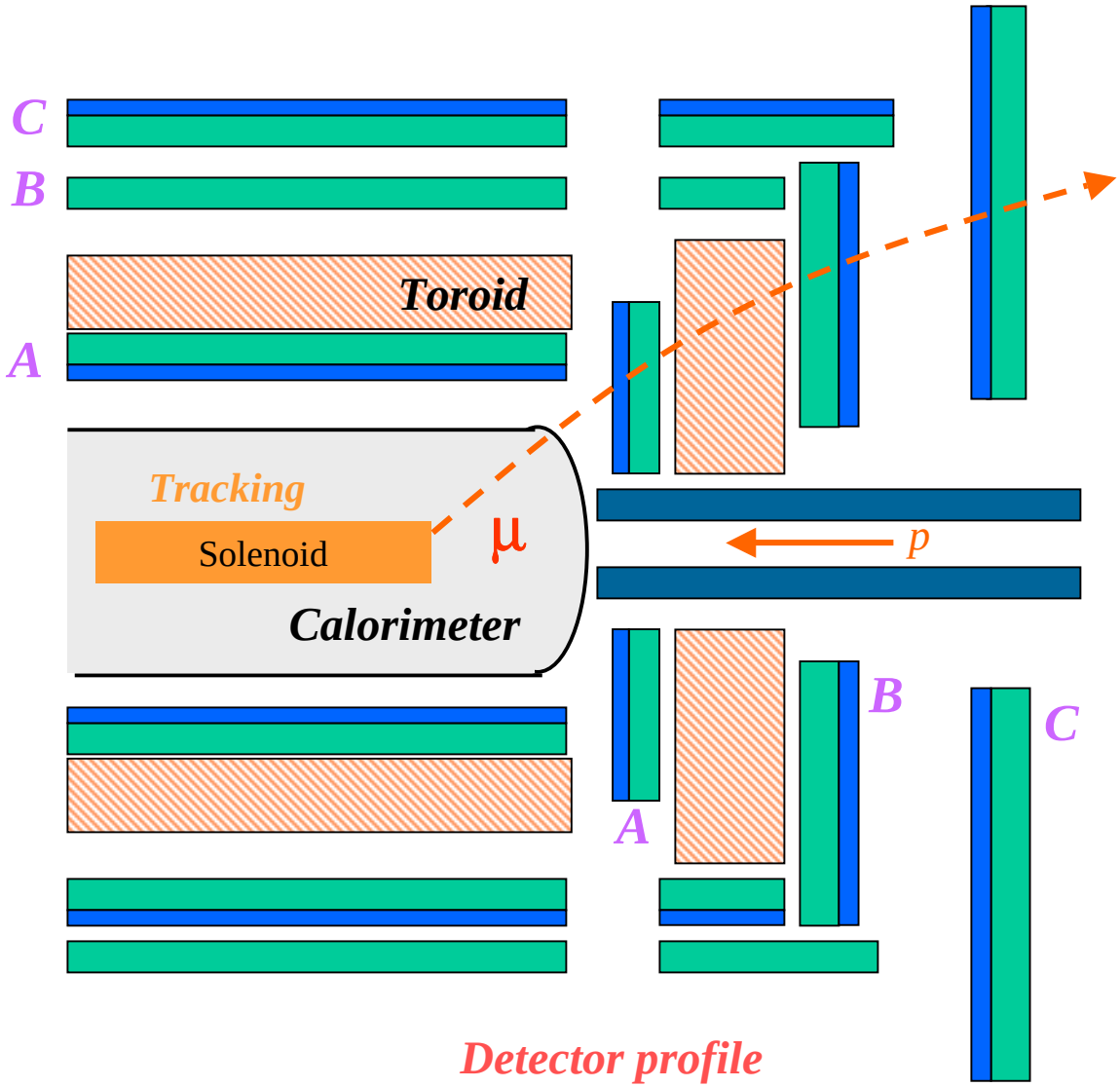

Detector profile

- Three muon layers: one inside (*A*), two outside (*B*, *C*) the toroid magnet (scintillators, drift tubes)

scintillators

drift tubes

- The muon system is divided into central & forward regions; each region is subdivided into (8) octants

Detector cross-section

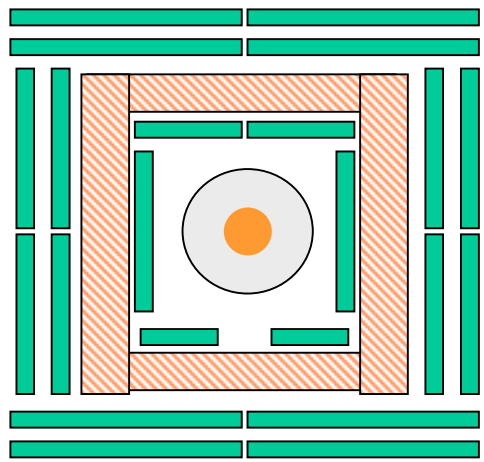

Christos Leonidopoulos
Columbia University

DØ Muon System: Scintillators

- **Central: 630 Barrel Scint. Counters (layer *A*) ⇒ Full coverage**

$$\Delta\phi \otimes \Delta\eta = 4.5^\circ \otimes 0.2$$

& cosmic ray veto Scint. Counters (layer *C*)

- **Forward: Pixel Scint. Counters (all 3 layers: *A*, *B*, *C*)**

$$\Delta\phi \otimes \Delta\eta = 4.5^\circ \otimes 0.1$$

coverage up to η=±2!

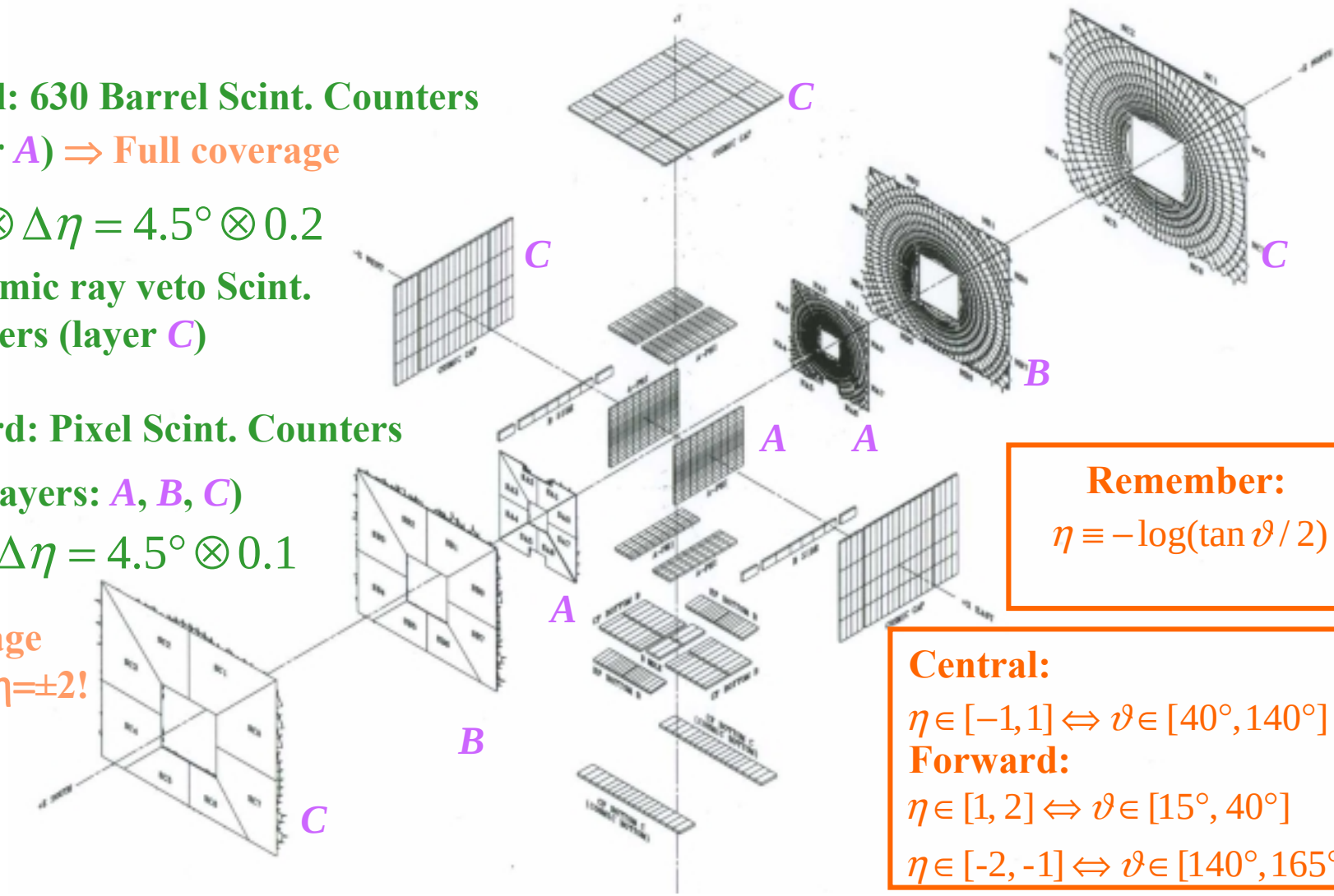

Remember:

$$\eta \equiv -\log(\tan\vartheta/2)$$

Central:

$\eta \in [-1,1] \Leftrightarrow \vartheta \in [40^\circ, 140^\circ]$

Forward:

$\eta \in [1, 2] \Leftrightarrow \vartheta \in [15^\circ, 40^\circ]$

$\eta \in [-2, -1] \Leftrightarrow \vartheta \in [140^\circ, 165^\circ]$

Christos Leonidopoulos
Columbia University

DØ Muon System: Drift Tubes

- **Central: Proportional drift tubes (5-cm thick cells: drift-distance-θ, axial-distance-ϕ ; layers *A*, *B*, *C*; drift residual from *A* layer used in muon trigger)**

- **Forward: Mini-Drift Tubes (1-cm thick square cells: drift-distance-*r* ; layers *A*, *B*, *C*)**

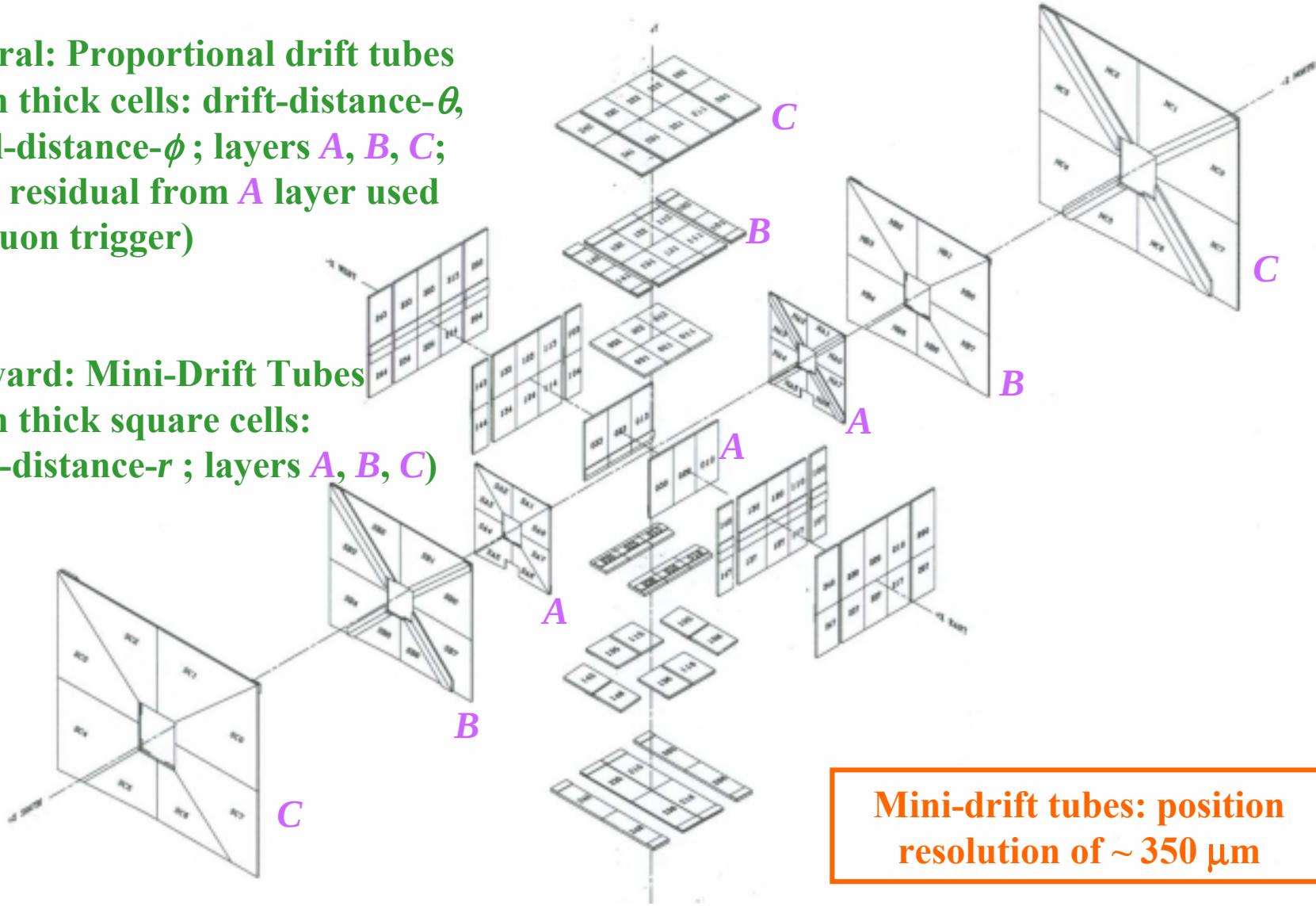

Mini-drift tubes: position resolution of ~ 350 μm

Christos Leonidopoulos
Columbia University

DØ: …The Muon Detector

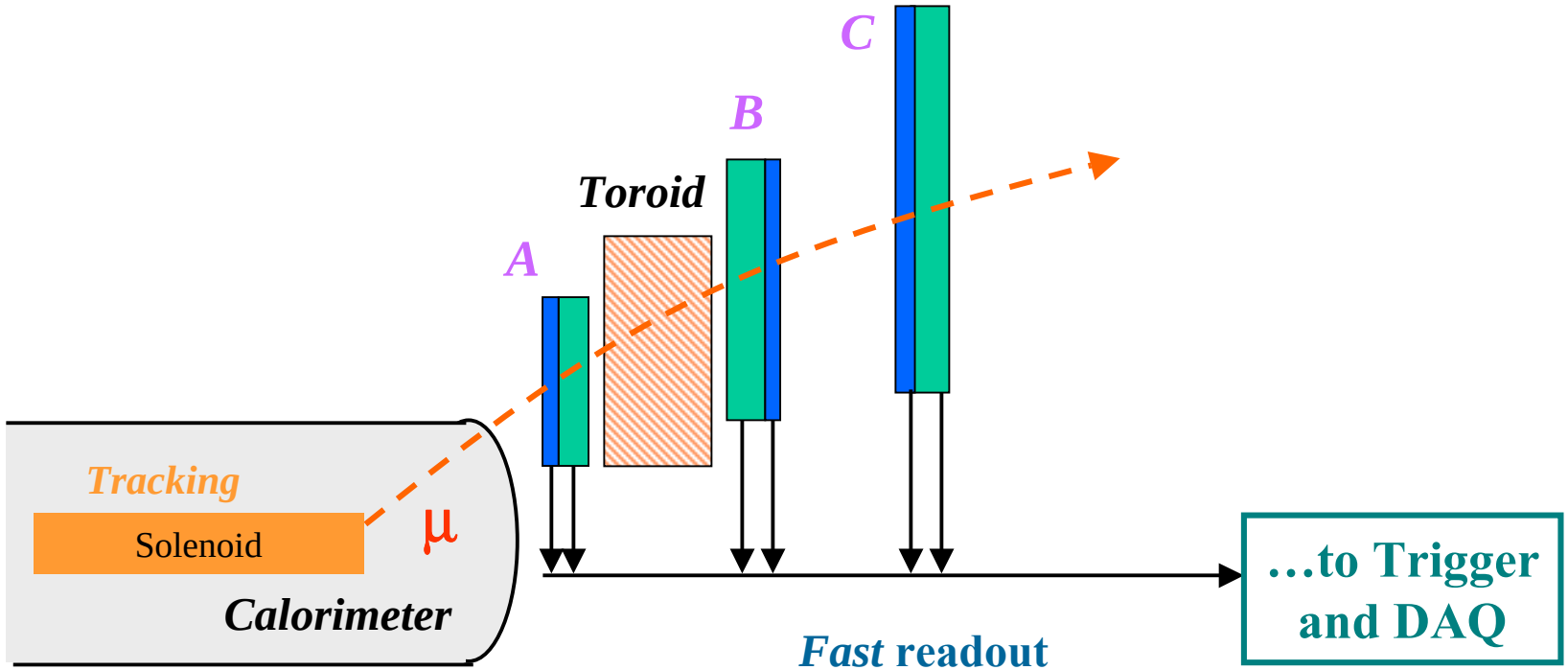

- **Muons with P_T > 3.5 GeV/*c* typically penetrate iron of toroid (~ 1 m)**
- **P_T measurement obtained from kink of muon in toroid (resolution: ~20%)**
- **We can also trigger on low P_T (~ 1.5 GeV/*c*) muons**

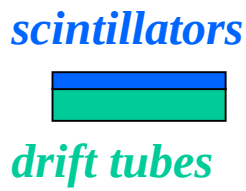

Christos Leonidopoulos
Columbia University

DØ Trigger: 3 Major Modules

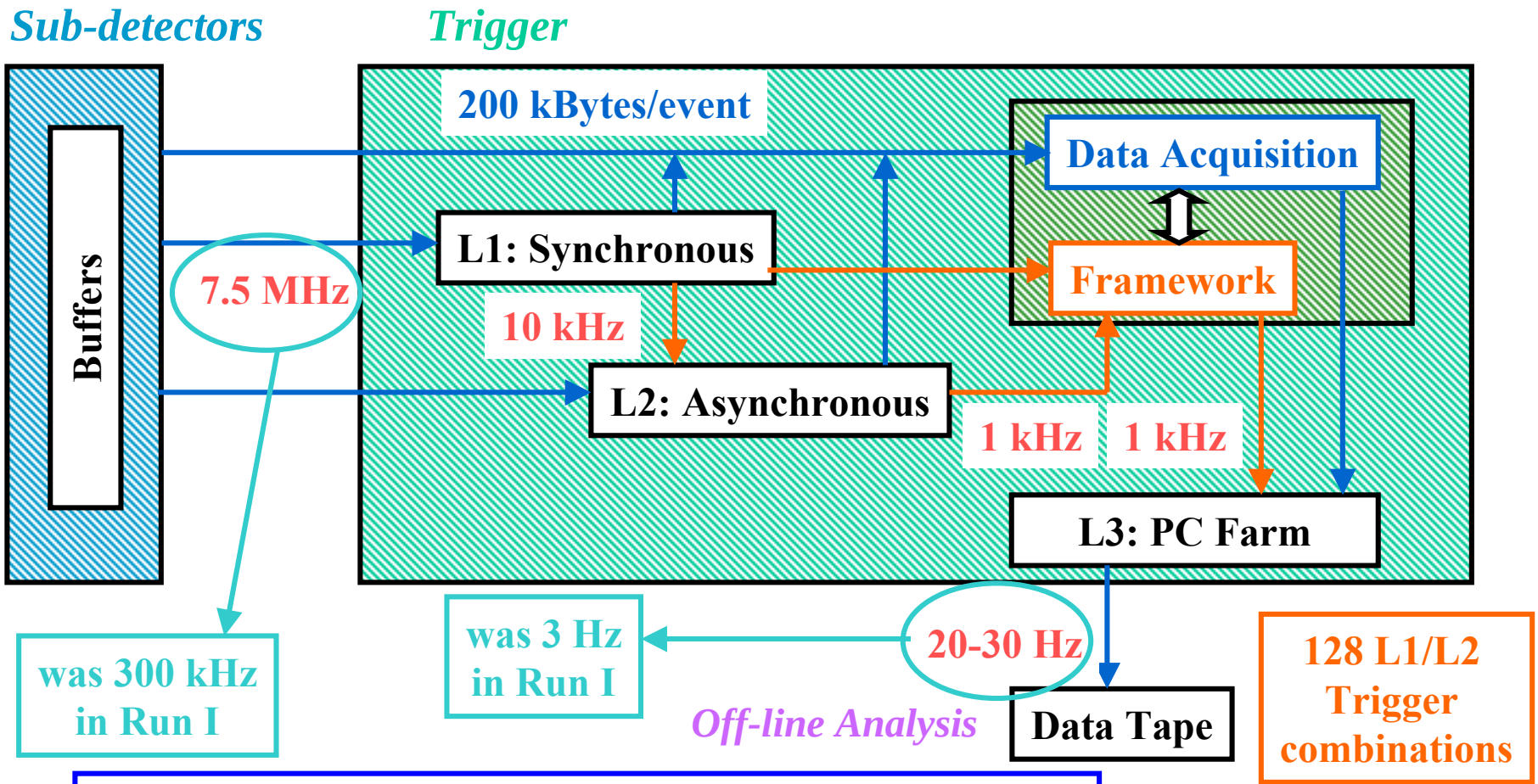

buffers – L1: 32 events, L2: 16 events, L3: 8 events

L1 → L2 → L3: increase in readout precision & object quality

Christos Leonidopoulos
Columbia University

Muon Trigger: 3+1 Modules

"Second Level Input Computers": aka L1.5

	L1MU	SLIC's	L2MU	L3MU
Input	CFT, MDT, PDT, MSC	L1mu, MDT, PDT, MSC	SLIC	L2mu, CAL, SMT, CFT, PDT, MDT
Hardware	Field Programmable Gate Arrays	Digital Signal Processors	Alpha Processors	Pentiums
Trigger Logic	Lookup Tables with track patterns	Track-stub finding in small detector regions	Combine μ-stubs from L1, A, BC into μ-candidates	Complete object reconstruction across detectors
Output	L1fwk, SLIC, L3	L2mu, L2glb, L3	L2glb, L3	Tape

CFT: central fiber tracker
PDT & MDT: Drift tubes
MSC: Scintillators
SMT: Silicon tracker
CAL: calorimeter

Bonus Level! A whole extra step of pre-processing for the muons!

Decision maker

Event order is strictly respected: event misalignment results in buffer flushing & soft reset

Christos Leonidopoulos
Columbia University

Muon Trigger: 3+1 Modules

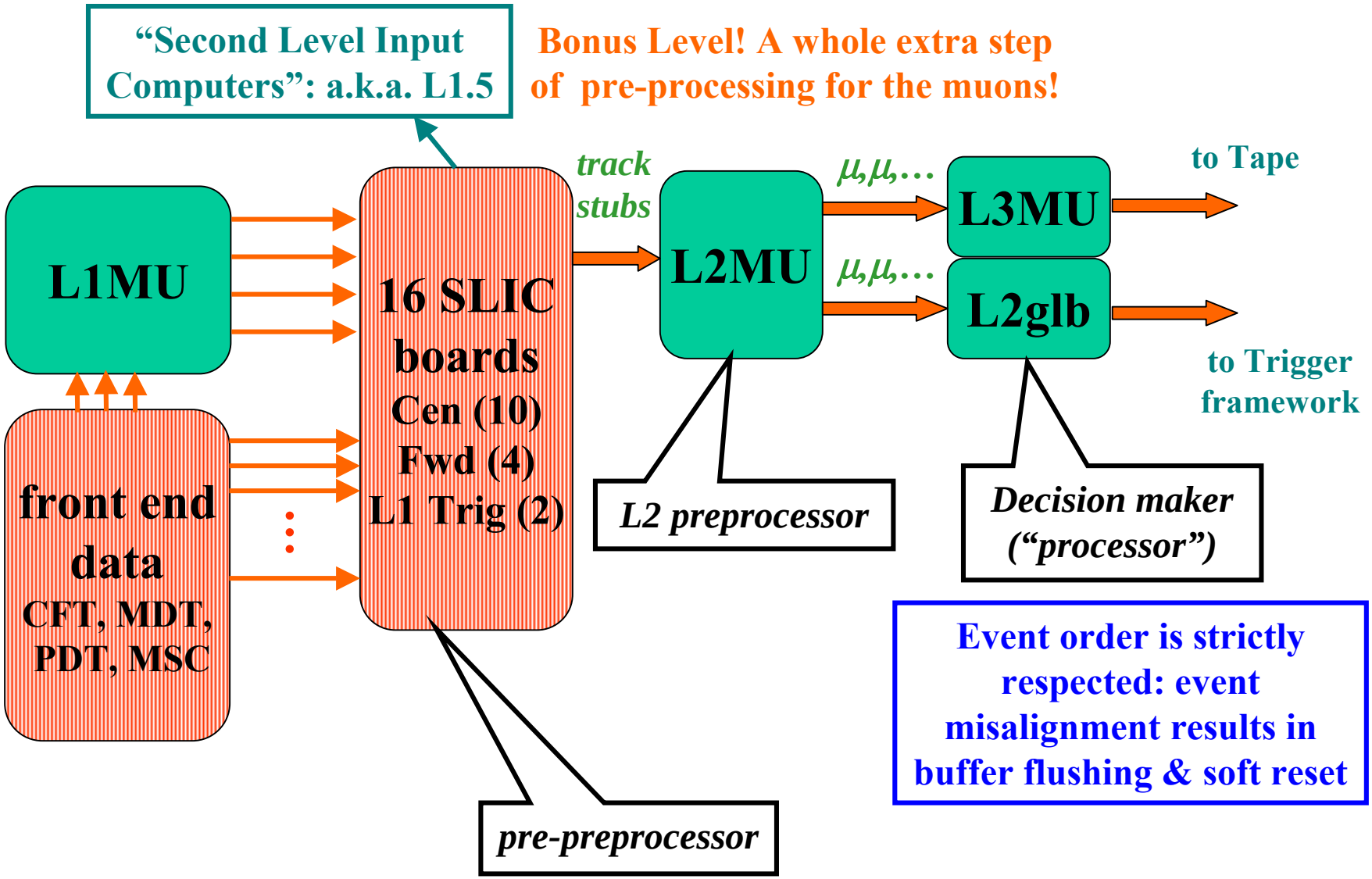

Christos Leonidopoulos
Columbia University

L1 Muon Trigger

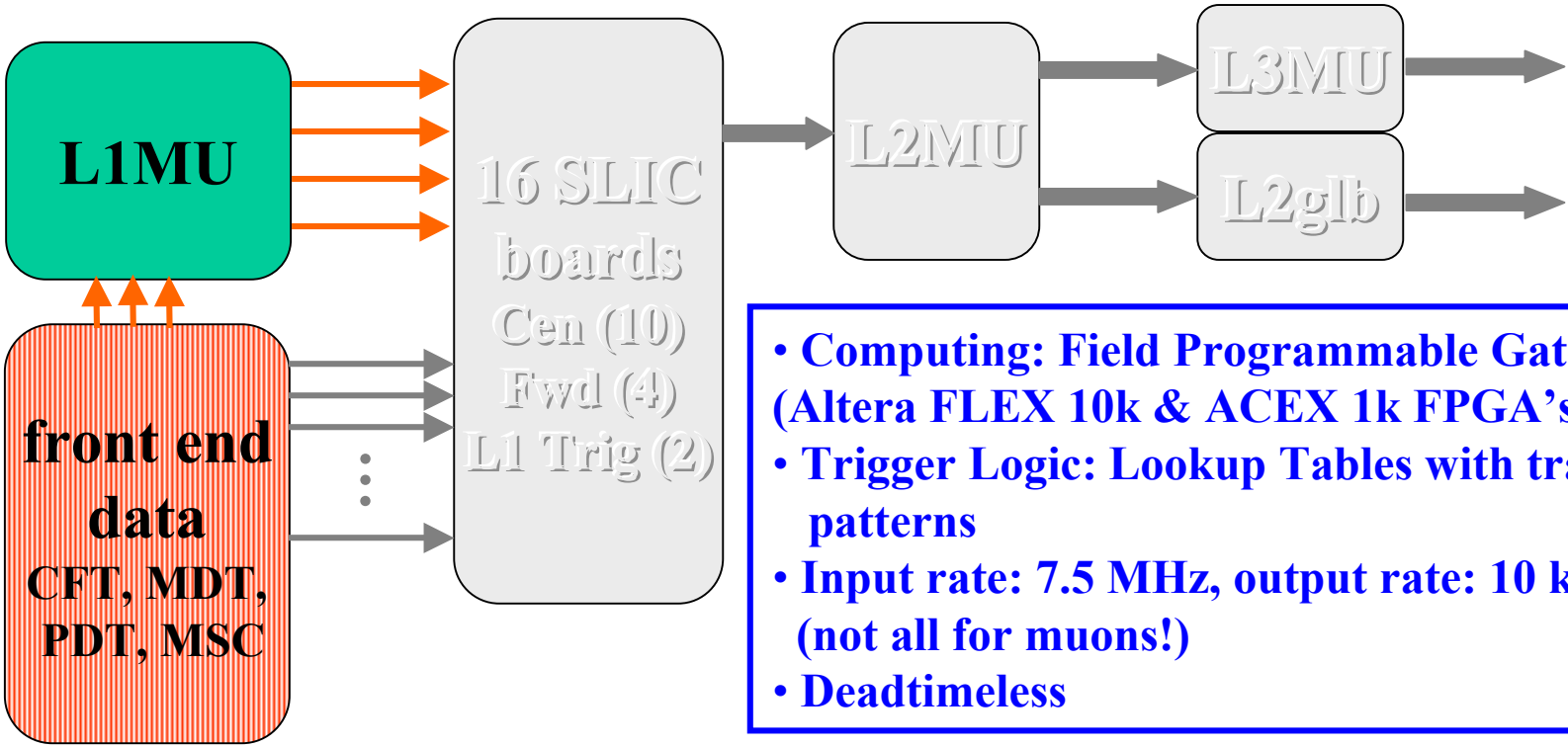

- Computing: Field Programmable Gate Arrays (Altera FLEX 10k & ACEX 1k FPGA's)
- Trigger Logic: Lookup Tables with track patterns
- Input rate: 7.5 MHz, output rate: 10 kHz (not all for muons!)
- Deadtimeless

fast, low quality L1mu objects

- Inputs: Central Fiber Tracker, Proportional Drift Tubes (cen), Mini-Drift Tubes (fwd), Muon Scintillator Counters (cen & fwd)
- Outputs: L1 framework, SLIC's, L3MU

Christos Leonidopoulos
Columbia University

…L1 Muon Trigger

- **Matching tracks from central fiber tracker with scintillator hits**

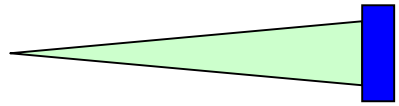

CFT- scintillator hit match
φ wedge = 4.5º

- **Matching patterns of scintillator & wire hits (*hodoscopic* roads for L1MU)**

drift tubes – A layer

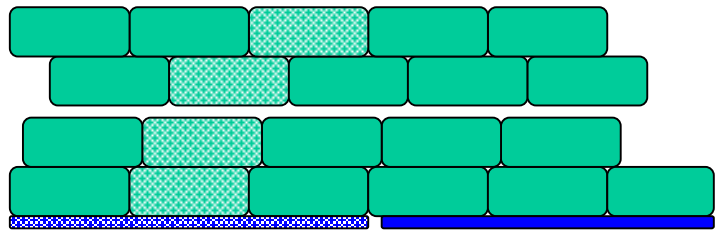

octant-wide scintillator and drift tube hit match (η wedge)

scint. counters

- **Background suppressing with timing gate for muon at scintillator planes & usage of cosmic ray veto**

L1MU objects ("centroids"):
- **P_T bin: ±[2, 4], ±[4, 7], [7, 11], [11, ∞) GeV/*c***
- **η region: |η|< 1.0, 1.5, 2.0**
- **object quality**

A. Maciel
N.I.U.

L1 Muon Trigger: First Runs

bunch Xing &min. bias

Trigger	Rate (Hz)
A central	82k
C central	1049k
A.C central	580
A.C.bx.fz central	36
A.C.bx.fz.jet central	0.3
A north	99k
C north	84k
A.C north	64
A.C.bx.fz north	33
A south	168k
C south	114k
A.C south	128
A.C.bx.fz south	48

scintillator hits @ 5×10^{30} cm^{-2} s^{-1}

Christos Leonidopoulos
Columbia University

Second Level Input Computers: "L1.5"

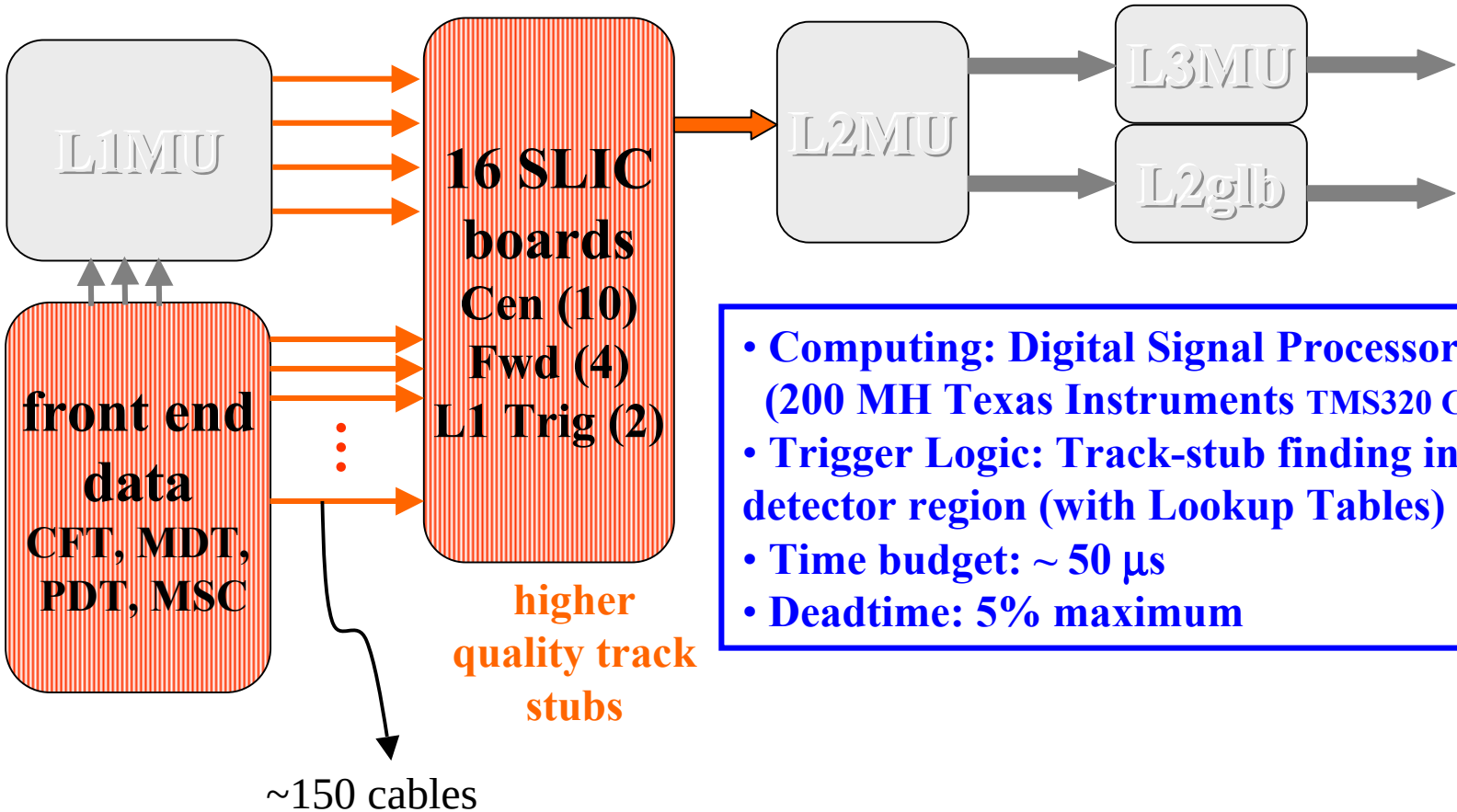

- Computing: Digital Signal Processors (200 MH Texas Instruments TMS320 C6201 DSP)
- Trigger Logic: Track-stub finding in small detector region (with Lookup Tables)
- Time budget: ~ 50 μs
- Deadtime: 5% maximum

- Inputs: Proportional Drift Tubes (cen), Mini-Drift Tubes (fwd), Muon Scintillator Counters (cen & fwd), L1MU
- Outputs: L2MU

Christos Leonidopoulos
Columbia University

SLIC's: "L1.5"

- **11 central, 5 forward SLIC boards**

- **Massive & *parallel* pre-processing with**
  - **64 worker DSP's**
  - **16 administrator DSP's**

- **Each worker DSP is assigned a small, *geographical* detector region (central/forward, L1/A/BC)**

- **Large software project!**
  - **SLIC driver and DSP OS (boot kernel, data I/O, memory management, interface with VME)**
  - **Algorithms, data routing, *monitoring, error handling***

200 MHz Texas Instruments Digital Signal Processors TMS320-C6201

Event order is respected; execution time is independent from number of hits (cannot do with farm)

- **high priority**
- **under testing**

***C* & Assembly**

Christos Leonidopoulos
Columbia University

SLIC Architecture: 1 out of 16

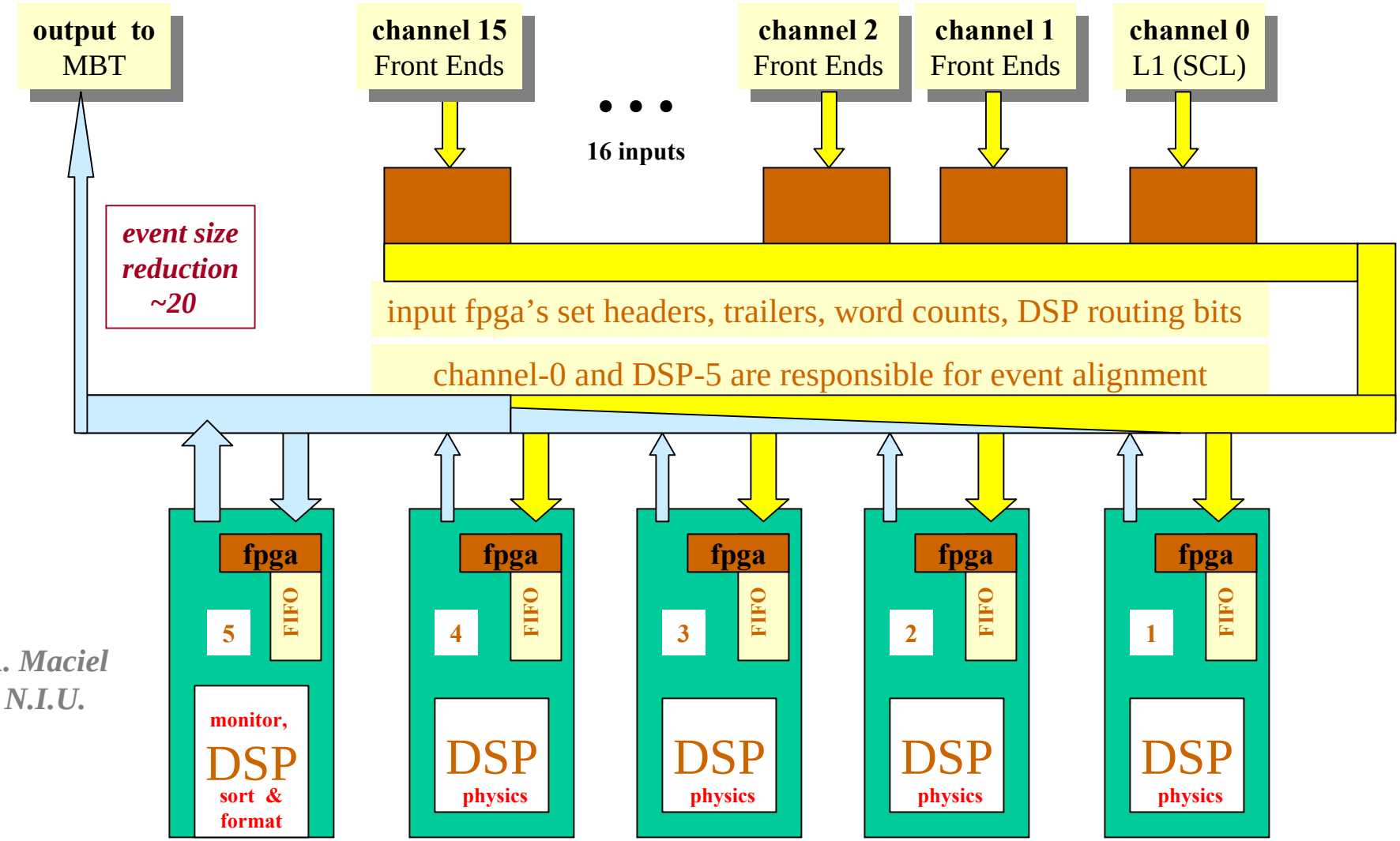

A. Maciel
N.I.U.

SLIC in production

Nevis Labs
Columbia Univ.

Christos Leonidopoulos
Columbia University

SLIC algorithms

Track stub finding: information stored in lookup tables
- **wire hit pattern recognition**
- **track fitting with wire geometry**
- **valid wire-scintillator hit correlations**

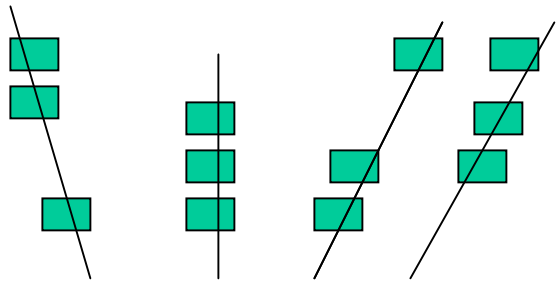

Track stub requirements:

- **A-stub: find 3 out of 4 A-layer hits (with time info) & scintillator hit**
- **BC-stub: 3 out of 6 B- & C-layer hits & scintillator hit(s)**
- **L1-stub: reformat L1mu output**

A. Maciel
N.I.U.

drift tubes – A layer

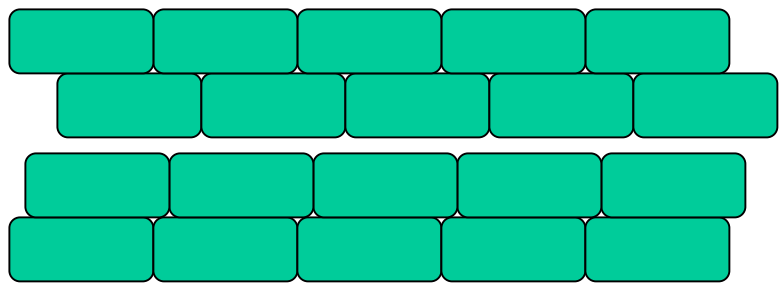

- **SLIC output: (ϕ, η) detector region, L1-P_T thresh., *r-z* slope (BC stubs) , stub quality, scintillator time information**
- **Average time used: ~20-30 μs**

Christos Leonidopoulos
Columbia University

SLIC performance

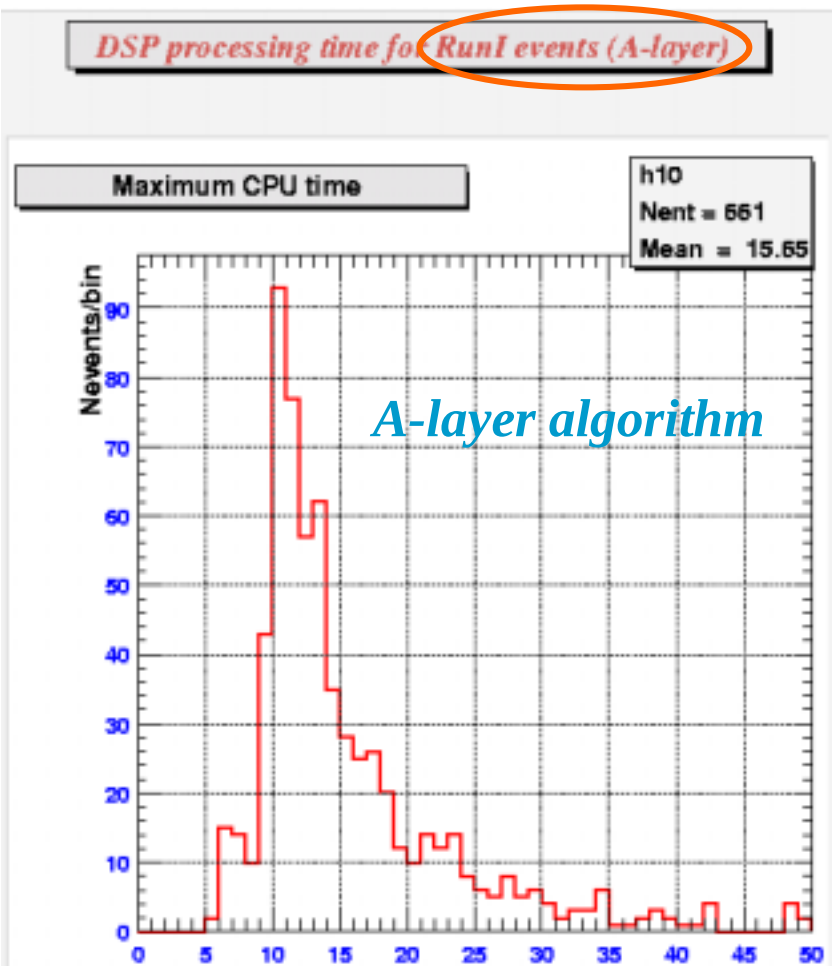

Maximum DSP time (μs)

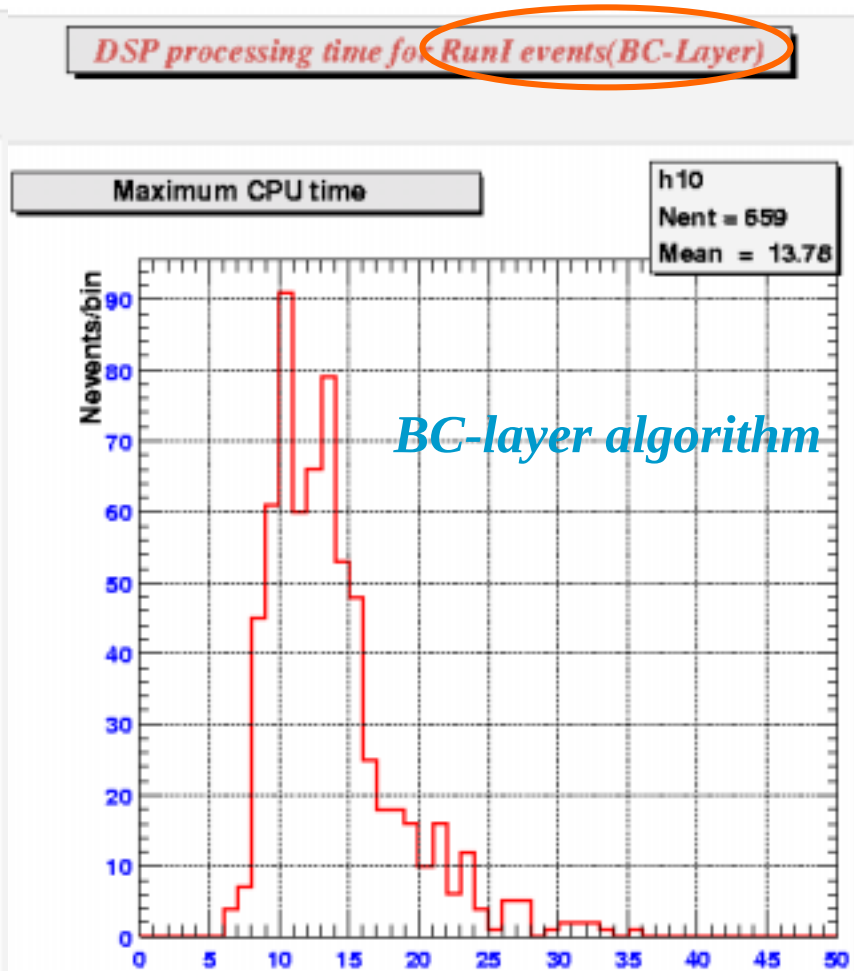

Maximum DSP time (μs)

L2 Muon Trigger

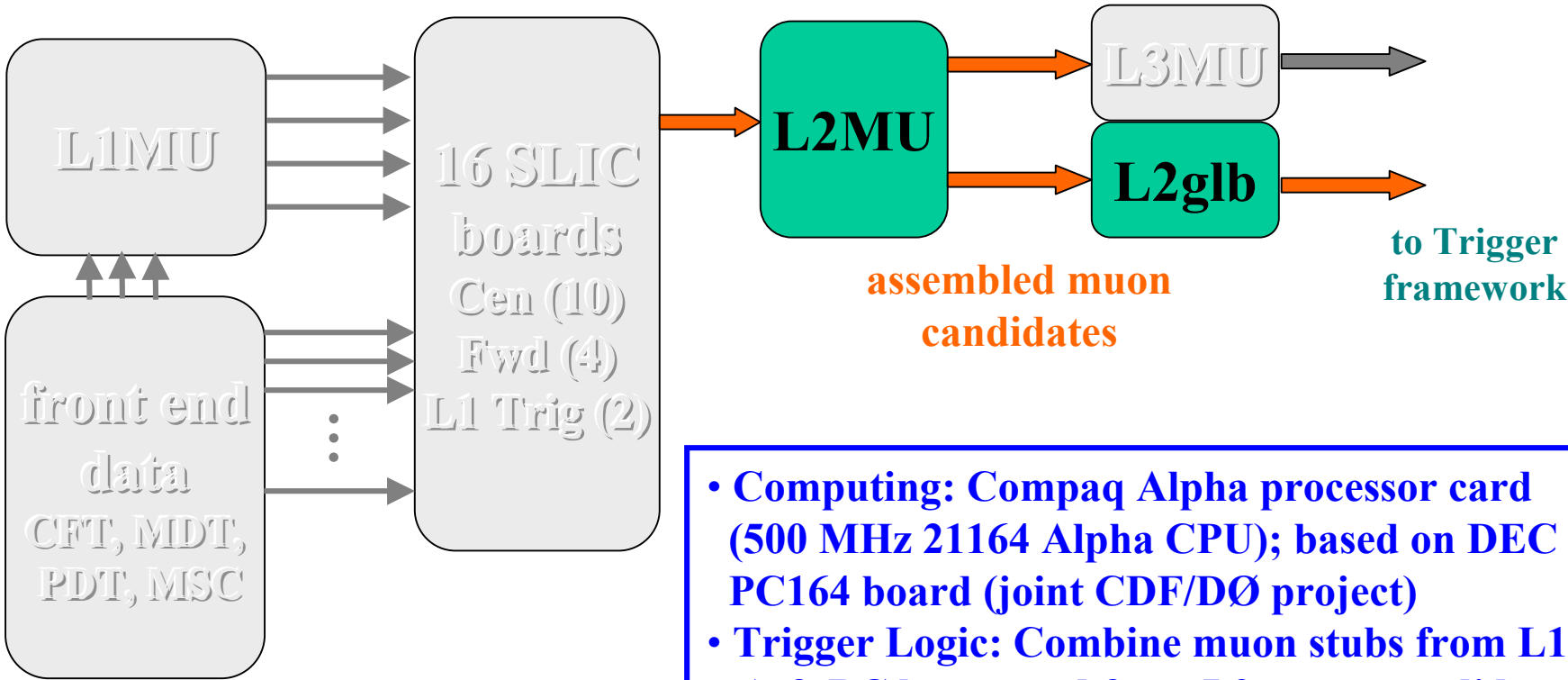

- **Computing: Compaq Alpha processor card (500 MHz 21164 Alpha CPU); based on DEC PC164 board (joint CDF/DØ project)**
- **Trigger Logic: Combine muon stubs from L1, A & BC layers and form L2-muon candidates**
- **Time budget: ~ 50 μs**

- **Inputs: SLIC's**
- **Outputs: L2glb → fwk, L3MU→Tape**

Christos Leonidopoulos
Columbia University

…L2 Muon Trigger

Alpha processor card:

- **500 MHz 21164 Alpha CPU**
- **static *C*++ on Linux (no dynamic memory, no virtual functions, etc.)**

Common architectural element in L2 modules

- **One central (11 SLIC inputs) & one forward (5 SLIC inputs) alpha boards**
- **Cen & fwd alpha's report to l2glb (also an alpha board)**
- **l2glb combines l2xxx objects constructed by processors and makes L2-trigger decisions**

Muon track assembly:

- **compare SLIC stubs, look for matches**
- **combine stubs into L2mu *candidates***
- **calclulate toroid P_T from A, BC stubs**
- **report 3-d track parameters and object quality**

Christos Leonidopoulos
Columbia University

L3 Muon Trigger

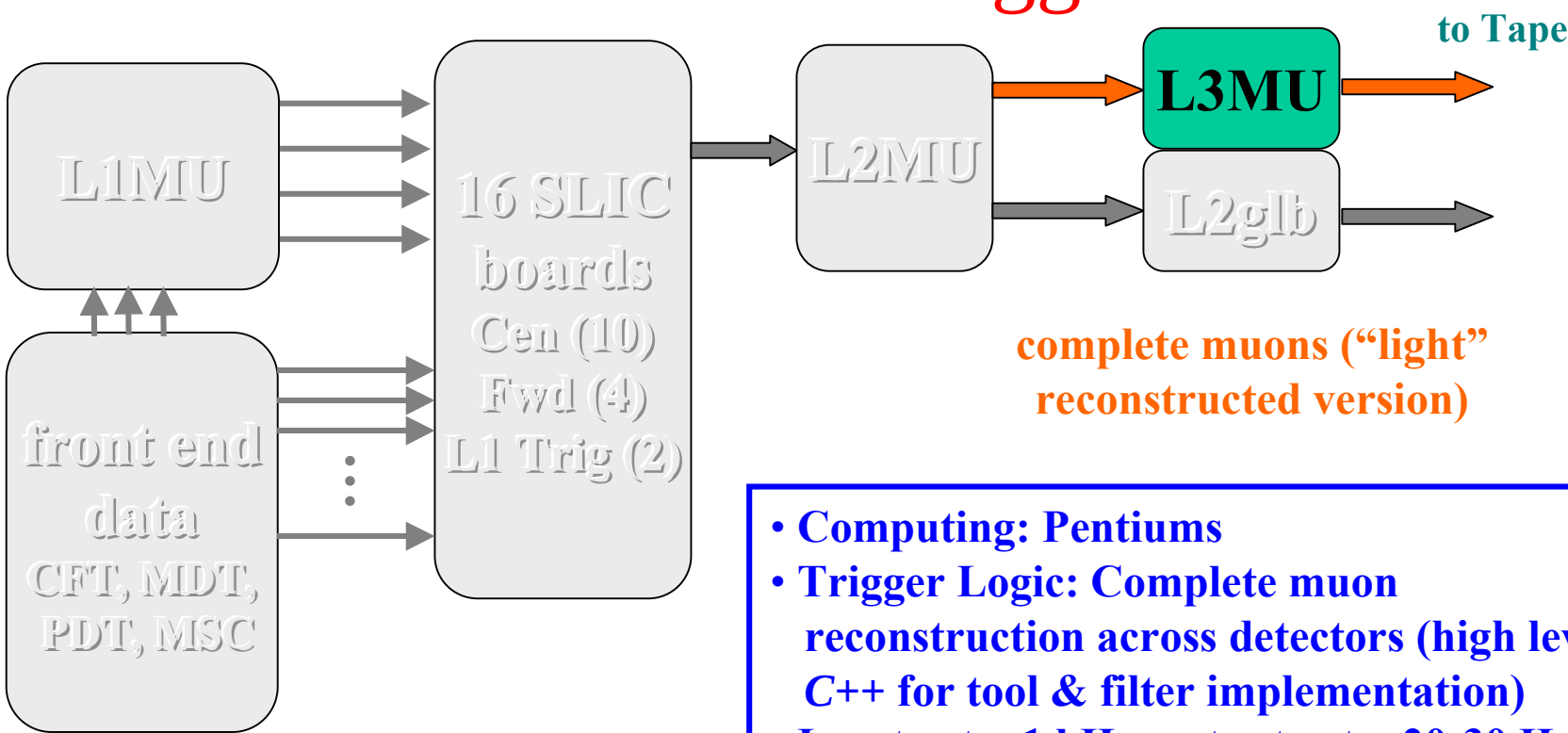

complete muons ("light" reconstructed version)

- Computing: Pentiums
- Trigger Logic: Complete muon reconstruction across detectors (high level *C*++ for tool & filter implementation)
- Input rate: 1 kHz, output rate: 20-30 Hz

- Inputs: Silicon Tracker, Central Fiber Tracker, Proportional Drift Tubes (cen), Mini-Drift Tubes (fwd), Muon Scintillator Counters (cen & fwd), Calorimeter
- Outputs: Tape for off-line Analysis

Christos Leonidopoulos
Columbia University

Status

- **L1MU: on-line & triggering on scintillator hits**

- **SLIC's & L2MU: getting ready to go on-line in September**

- **L3MU: Most of physics tools in place; accepting & processing scintillator hits**

- **The trigger is slowly waking up; This is a very exciting period for DØ!**

- **Hard work and lots of data are ahead of us!**

Christos Leonidopoulos
Columbia University