Forward Proton Detector

Carley Martins

Dzero/FPD

On site activities

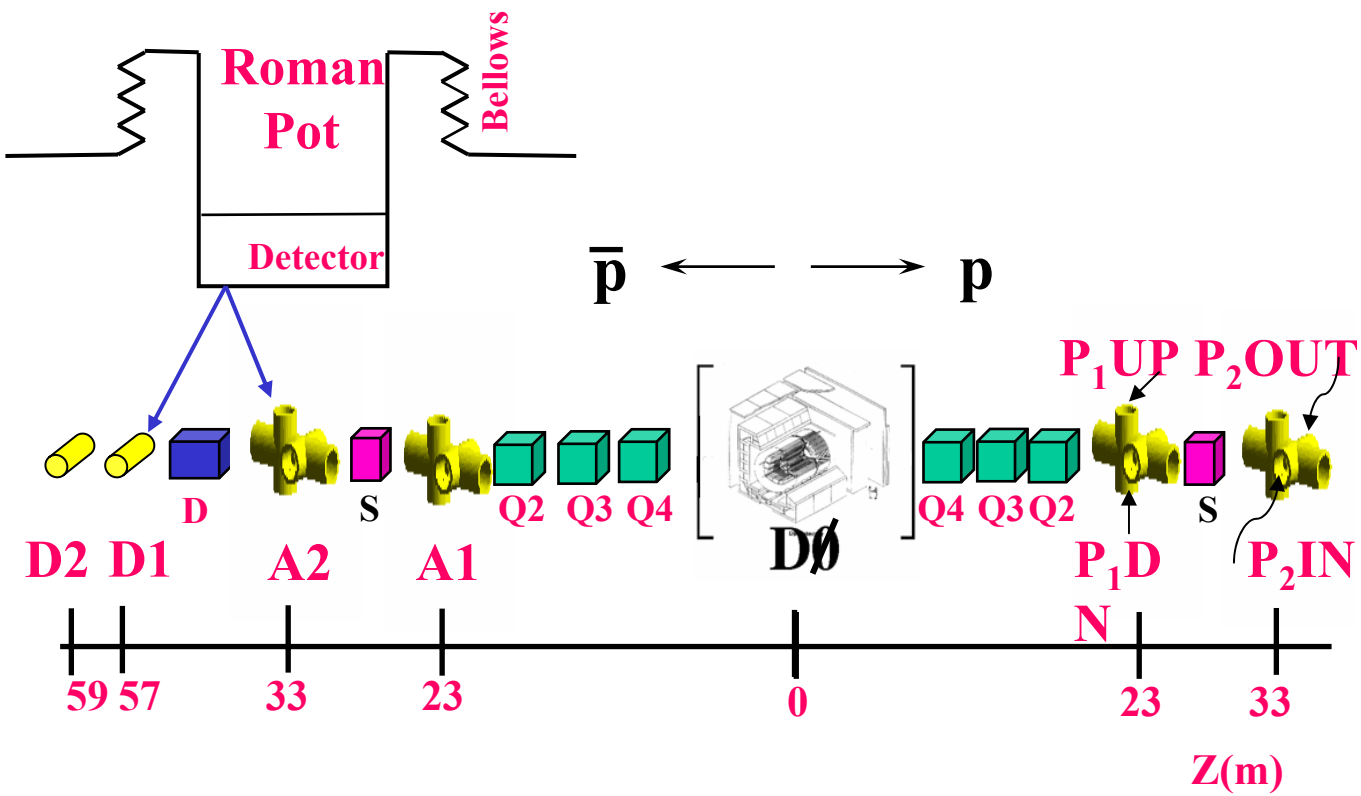

Forward Proton Detector

Dzero and FPD operation

- Shifts (FPD & Calorimeter)
- Plastic frame construction
- High helium levels on PMT
- Eletronic setting on SMR

FPD Hardware

- Detector configuration
- FPD integration

  => trigger & readout

Forward Proton Detector

FPD Trigger and Readout

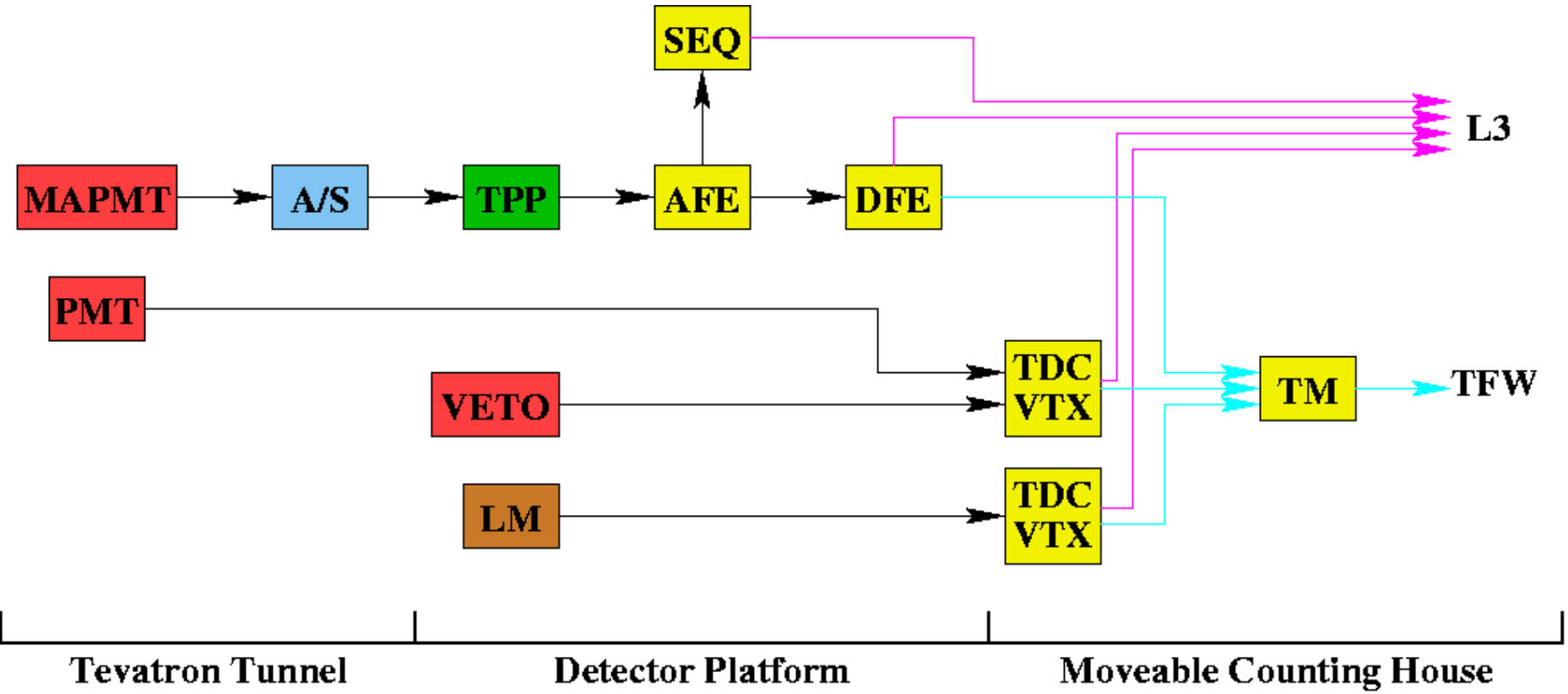

Forward Proton Detector

FPD Integration

Trigger manager

cable & boards:

(Collision Hall to Movable Counting House).

•MRC

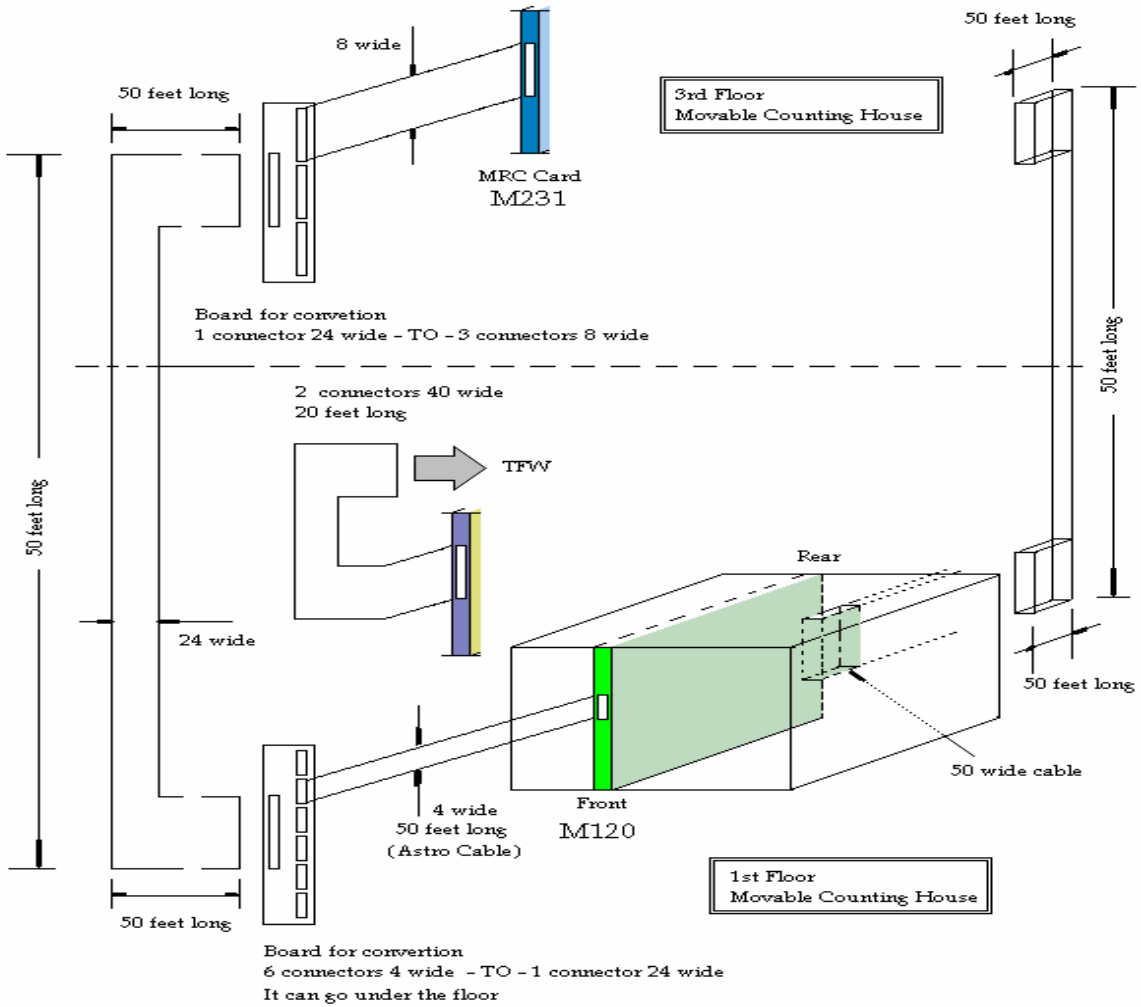

Forward Proton Detector

Transition Patch Panel (TPP) boards and AFE

(Rack PW08 on Collision Hall)

Very small space to accomodate cables and boards inside rack !!

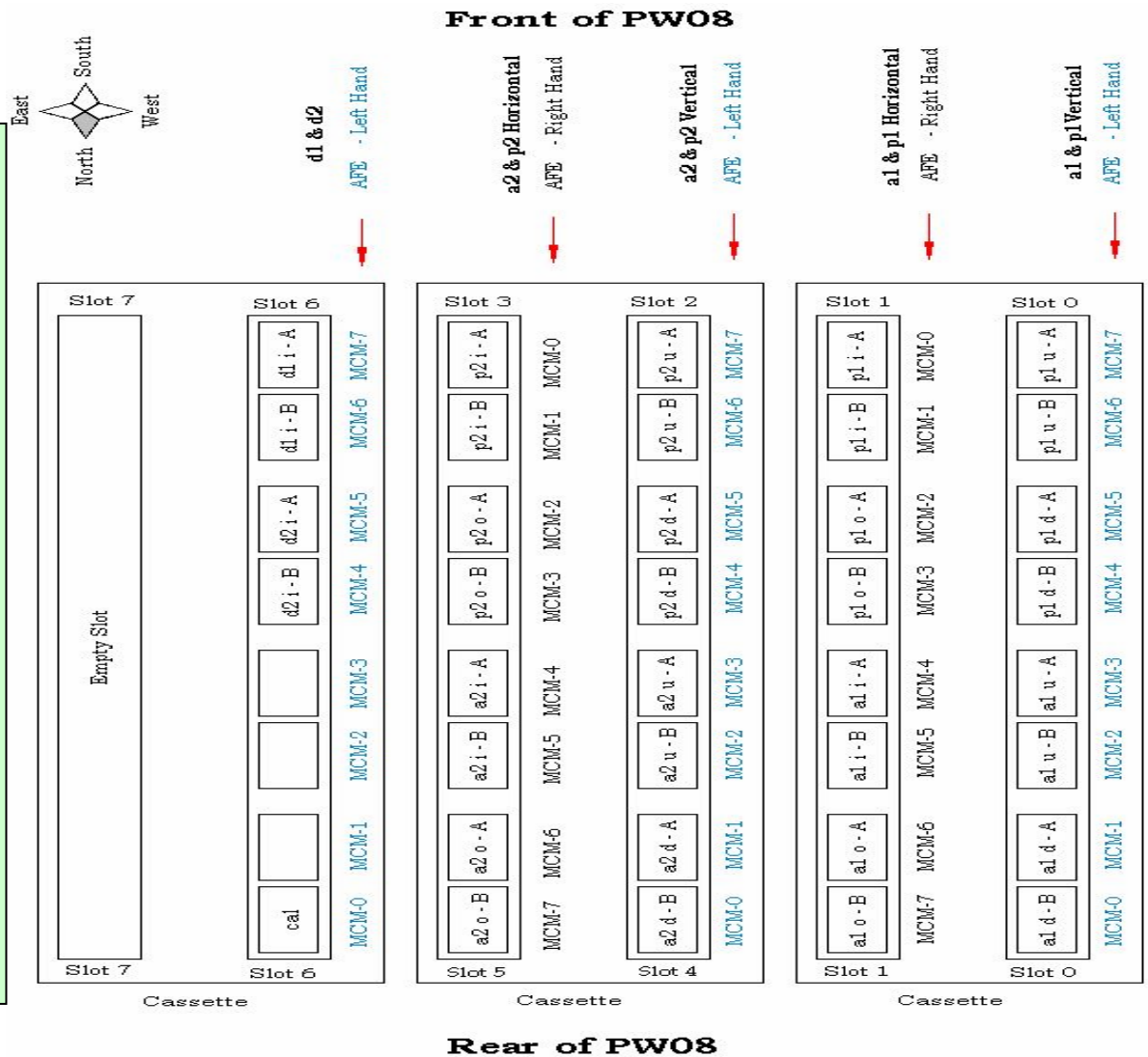

Forward Proton Detector

TPP: Noise Problem

Timing for FPD => Pedestal runs and calibration

Dipole

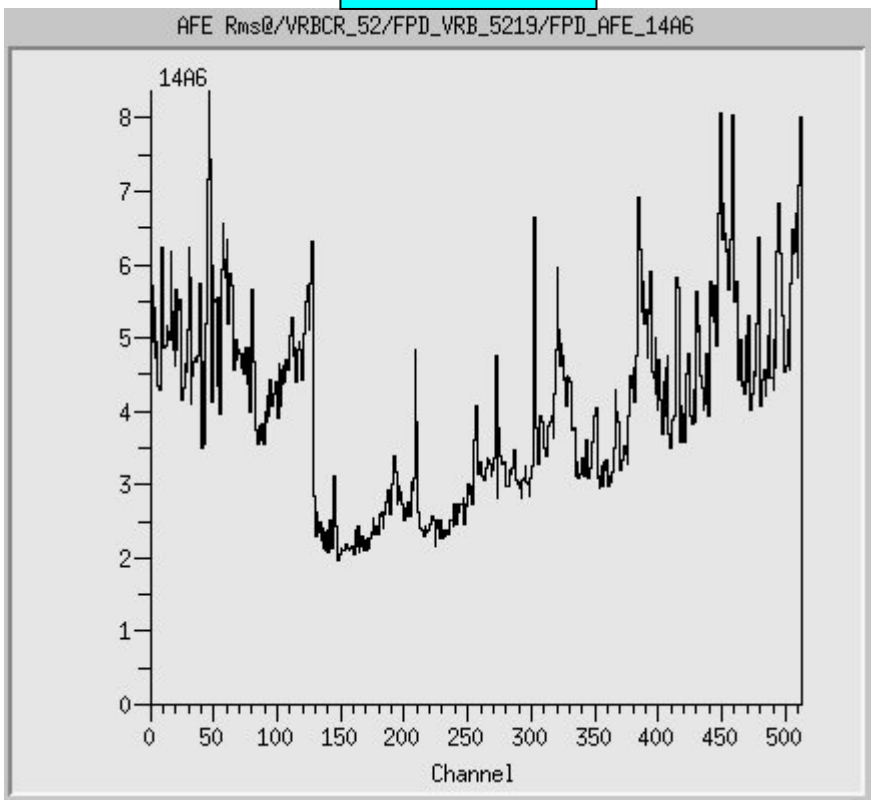

A1 Up

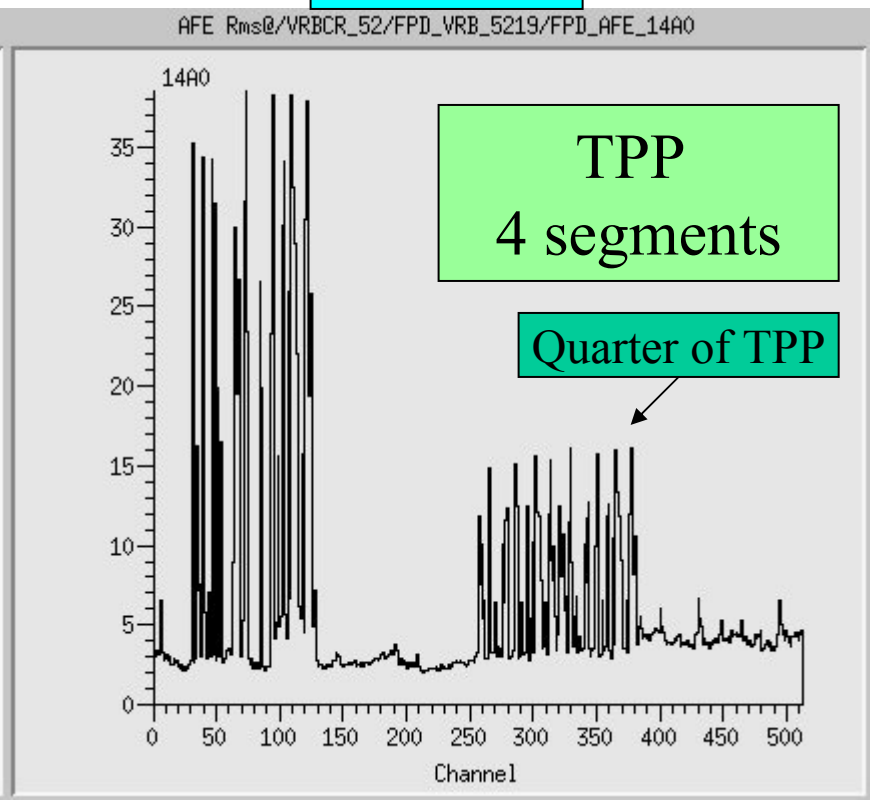

Forward Proton Detector

Noise Problem

- Amplifier shape
- Ribbon cables
- transformers
- TPP
- Flex cable
- AFE

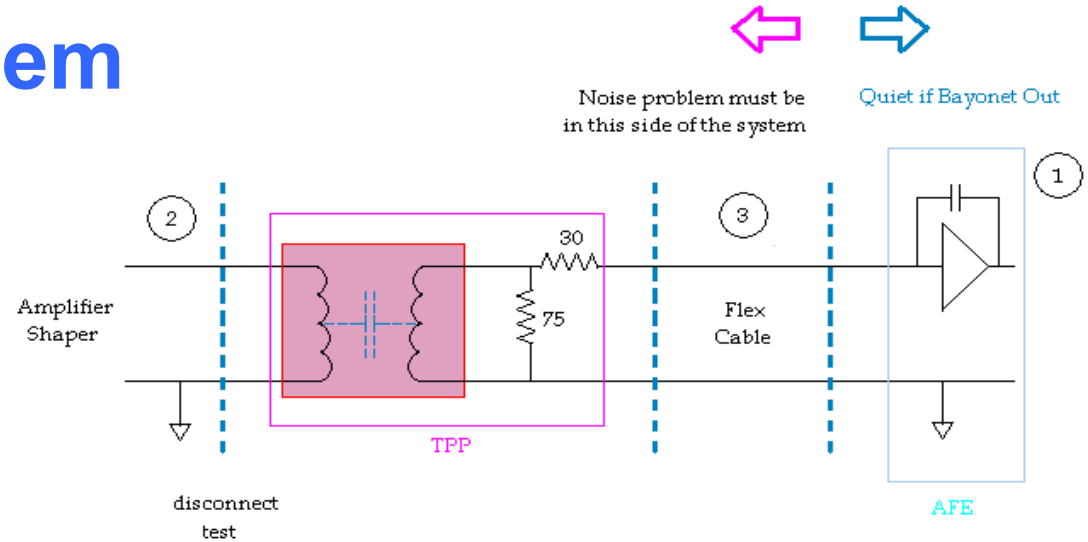

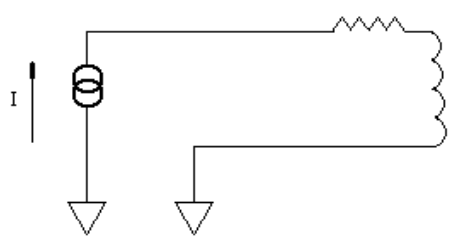

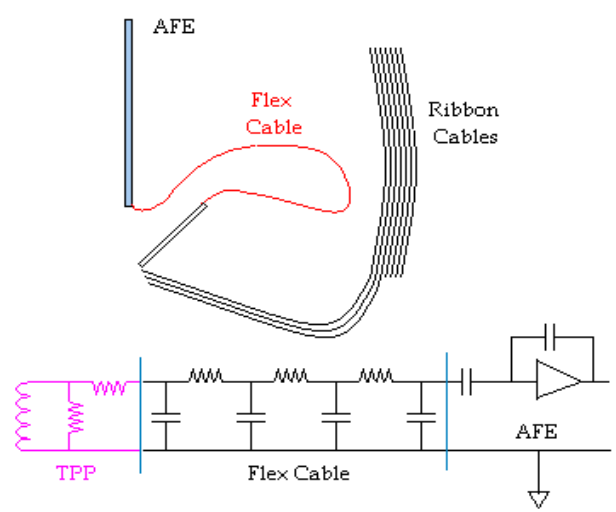

Forward Proton Detector

Ribbon cables status

Ribon cables tests

For A1_up:
return lines for all channel was checked

~ 10% of the total channel was dead

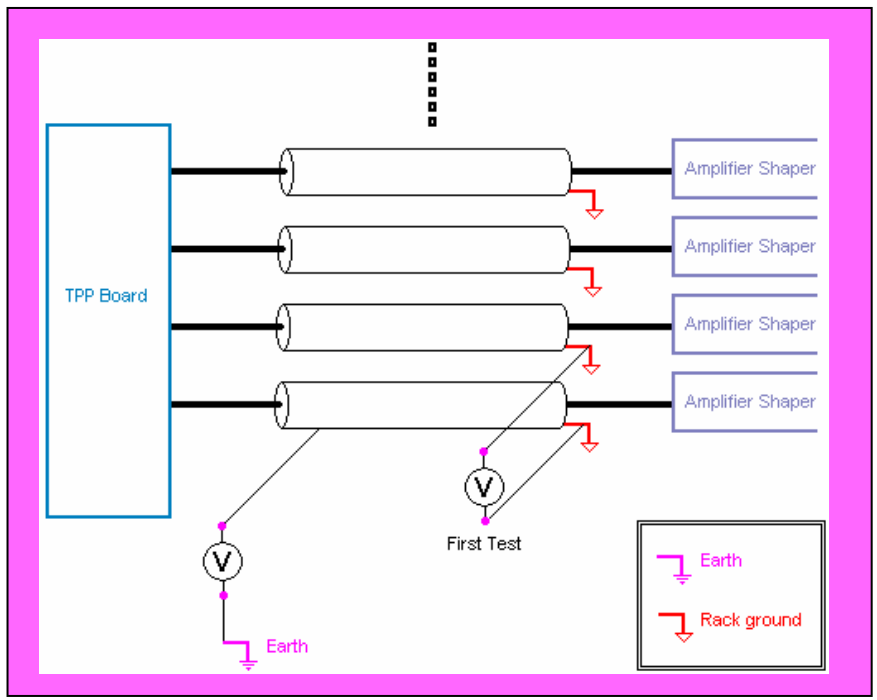

Forward Proton Detector

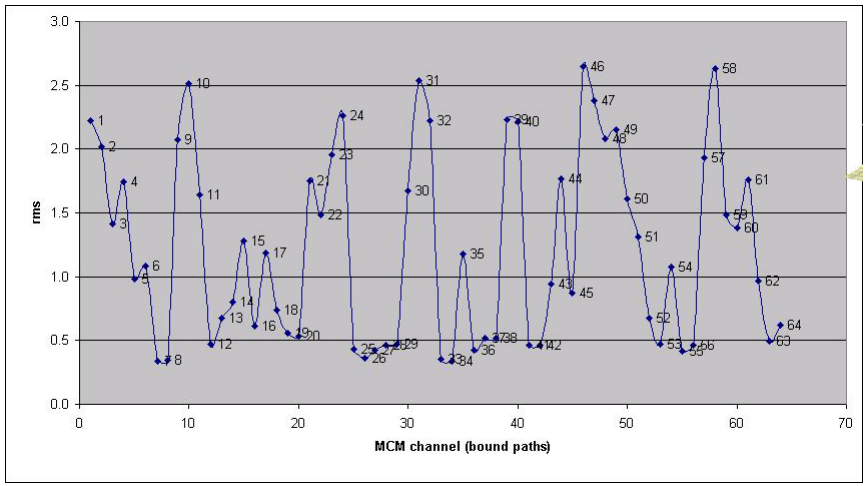

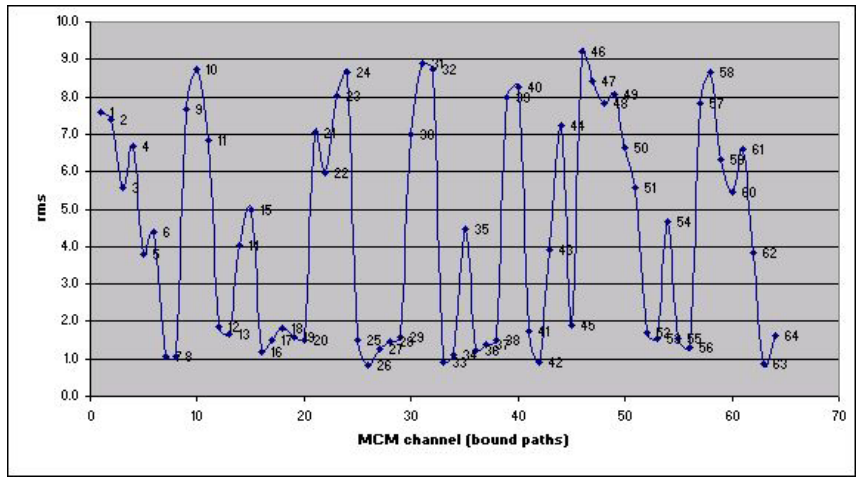

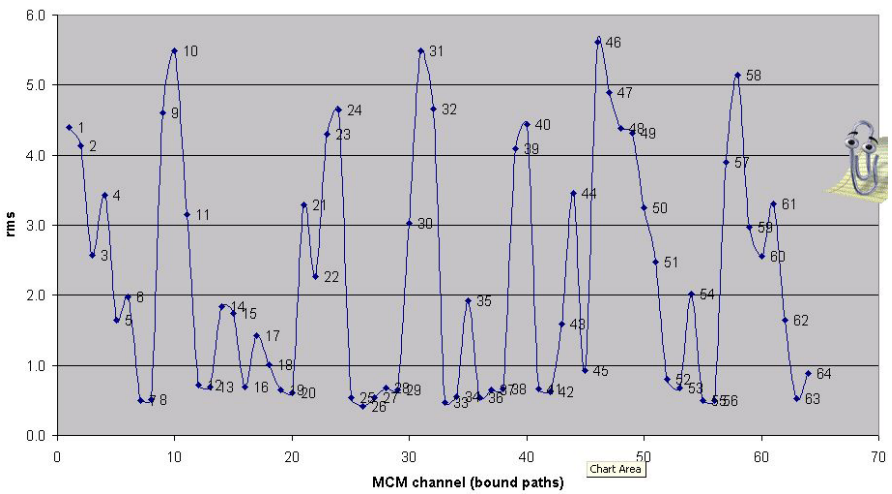

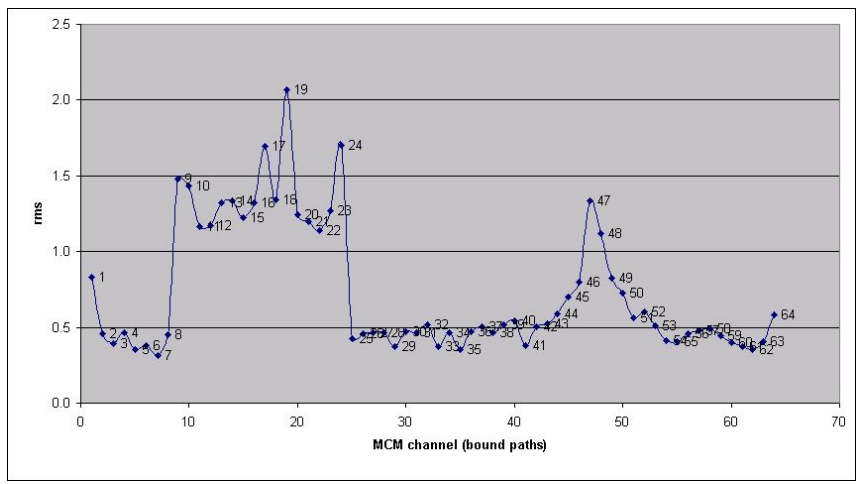

Forward Proton Detector

Detectors cable configurations

Ribbon cables

- for dipoles => two segments
  no (significant) noise
- for others detectors => one segment
  significant noise

Grande mistério !?!?!?!

In the access to Collision Hall we noticed a connection between both ground planes of dipole board (electronic and tunnel ground)

Forward Proton Detector

TPP dipole with electronic and tunnel ground disconnected, shown the same noise pattern!

Final conclusion

TPP needs to be redesigned to take in account the electric characteristics of of AFE boards

Noise report @

http://d0server1.fnal.gov/projects/FPD/Hardware/Trigger/AFE/NoiseProblems/Report1_2003Jun11_a.doc