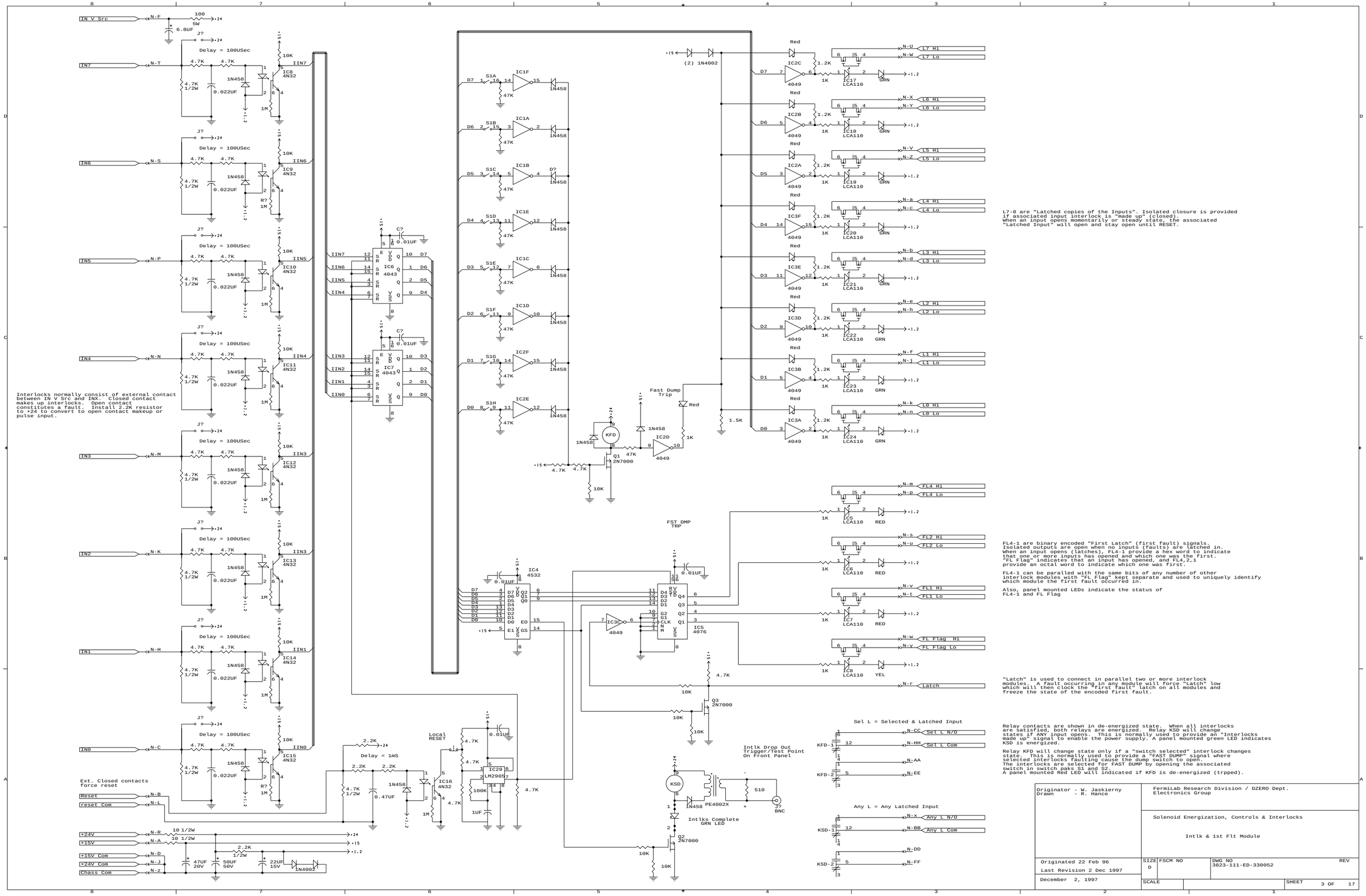

L7-0 are "Latched copies of the Inputs". Isolated closure is provided if associated input interlock is "made up" (closed). When an input opens momentarily or steady state, the associated "Latched Input" will open and stay open until RESET.

FL4-1 are binary encoded "First Latch" (first fault) signals. Isolated outputs are open when no inputs (faults) are latched in. When an input opens (latches), FL4-1 provide a hex word to indicate that one or more inputs has opened and which one was the first. "FL Flag" indicates that an input has opened, and FL4,2,1 provide an octal word to indicate which one was first.

FL4-1 can be paralled with the same bits of any number of other interlock modules with "FL Flag" kept separate and used to uniquely identify which module the first fault occurred in.

Also, panel mounted LEDs indicate the status of FL4-1 and FL Flag

"Latch" is used to connect in parallel two or more interlock modules. A fault occurring in any module will force "Latch" low which will then clock the "first fault" latch on all modules and freeze the state of the encoded first fault.

Relay contacts are shown in de-energized state. When all interlocks are satisfied, both relays are energized. Relay KSD will change states if ANY input opens. This is normally used to provide an "Interlocks made up" signal to enable the power supply. A panel mounted green LED indicates KSD is energized.

Relay KFD will change state only if a "switch selected" interlock changes state. This is normally used to provide a "FAST DUMP" signal where selected interlocks faulting cause the dump switch to open. The interlocks are selected for FAST DUMP by opening the associated switch in switch paks S1 and S2. A panel mounted Red LED will indicated if KFD is de-energized (trpped).

Originator - W. Jaskierny Drawn - R. Hance	FermiLab Research Division / DZERO Dept. Electronics Group
	Solenoid Energization, Controls & Interlocks Intlk & 1st Flt Module
Originated 22 Feb 96 Last Revision 2 Dec 1997	SIZE D · FSCM NO · DWG NO 3823-111-ED-330052 · REV
December 2, 1997	SCALE · SHEET 3 OF 17