Saturation and diffraction

Krzysztof Golec-Biernat

Institute of Nuclear Physics, Cracow

Small-x Workshop, Sinaia, 1 July 2005

Diffractive DIS

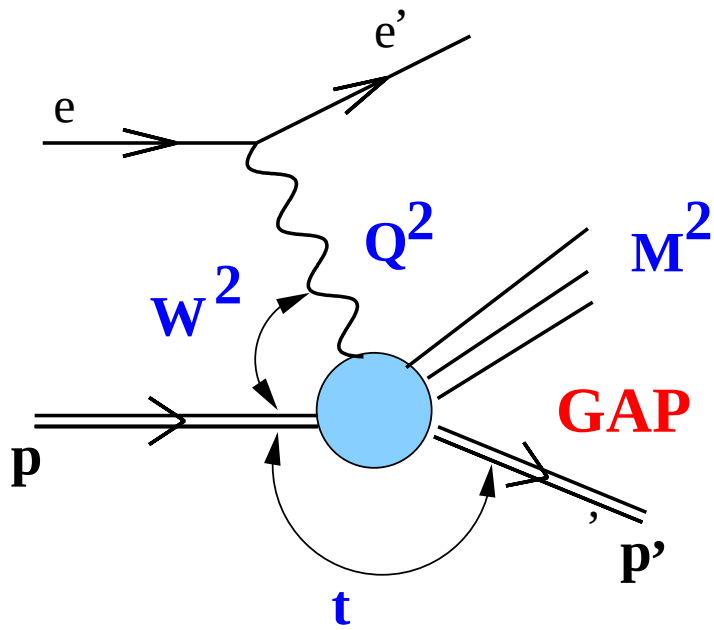

- Two more variables: $x_{I\!P} = (Q^2 + M^2)/W^2$ and t
- Diffractive parton distributions (leading twist):

$$F_2^D(x, Q^2, x_{I\!P}, t) \; = \; \sum_{i=f,\bar{f}} e_i^2 \, q_i^D(x, Q^2, x_{I\!P}, t)$$

Regge factorization

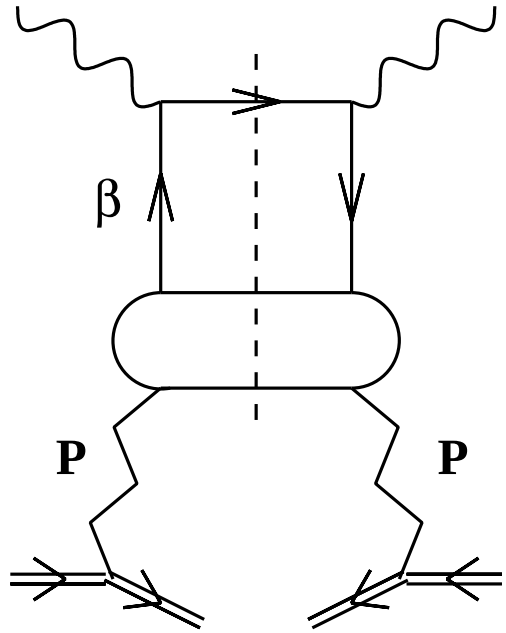

- $q_i^D = f(x_{I\!P}, t)\, q^{I\!P}(\beta, Q^2)$ where $\beta = Q^2/(Q^2 + M^2) = x/x_{I\!P}$
- DGLAP evolution of Pomeron parton distributions $q^{I\!P}(\beta, Q^2)$
- subleading reggeon exchanges

Dipole approach

In the proton rest frame:

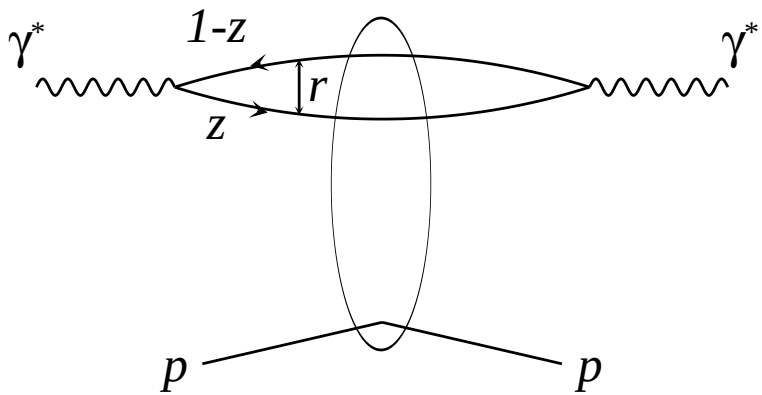

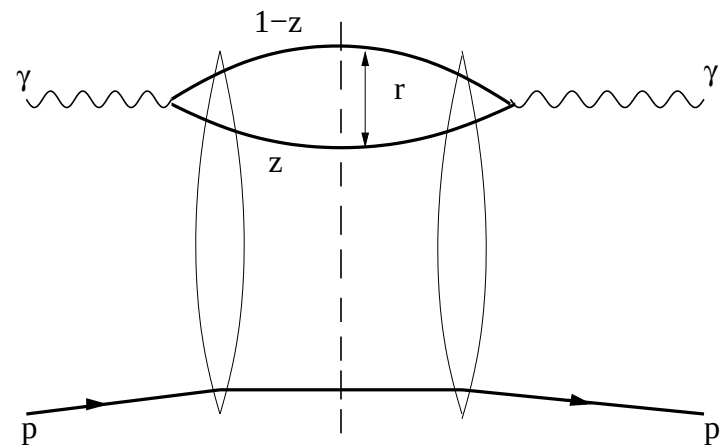

$$\sigma^{tot} = \int d^2r\, dz\, |\Psi(r,z,Q)|^2\, \sigma_{qq}(x,r) \qquad \left.\frac{d\sigma^D}{dt}\right|_{t=0} = \int d^2r\, dz\, |\Psi(r,z,Q)|^2 \sigma_{qq}^2(x,r)$$

Interaction encoded in the dipole cross section σ_{qq}

Dipole cross section with saturation

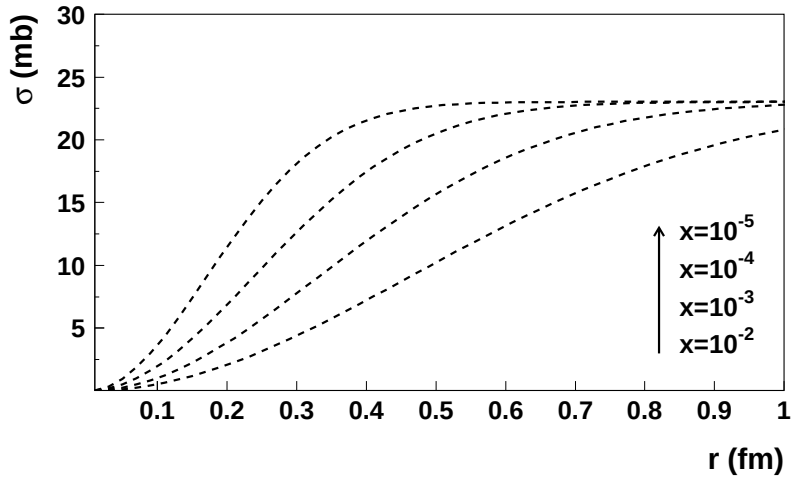

$$\sigma_{qq}(x,r) = \sigma_0 \left\{1 - \exp\left(-r^2 Q_s^2(x)\right)\right\}$$

- unitarity bound implemented
- saturation scale: $Q_s(x) = Q_0\, x^{-\lambda}$
- geometric scaling:

$$\sigma_{qq}(x,r) = \sigma_{qq}(r Q_s(x)) \qquad \rightarrow \qquad \sigma^{tot}(x,Q^2) = \sigma(Q^2/Q_s^2(x))$$

Implications for diffraction

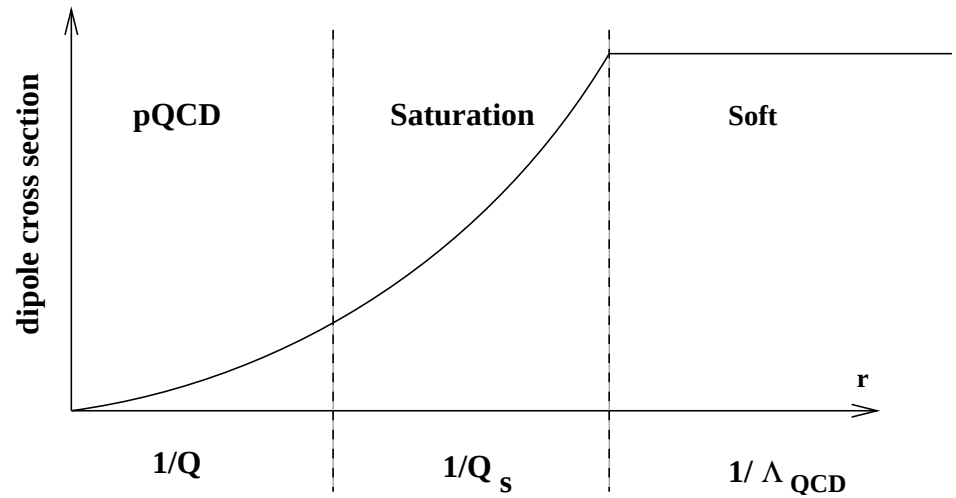

$$F_2 = Q^2 \sigma^{tot} \sim 1 + \ln Q_s^2/Q^2 + 1$$

$$F_2^D = Q^2 \sigma^D \sim 1/Q^2 + 1 + 1$$

Diffraction probes saturation. Constancy of the ratio:

$$\frac{\sigma^D}{\sigma^{tot}} \sim \frac{1}{\ln(Q_s^2(x)/Q^2)}$$

Comparison with HERA data

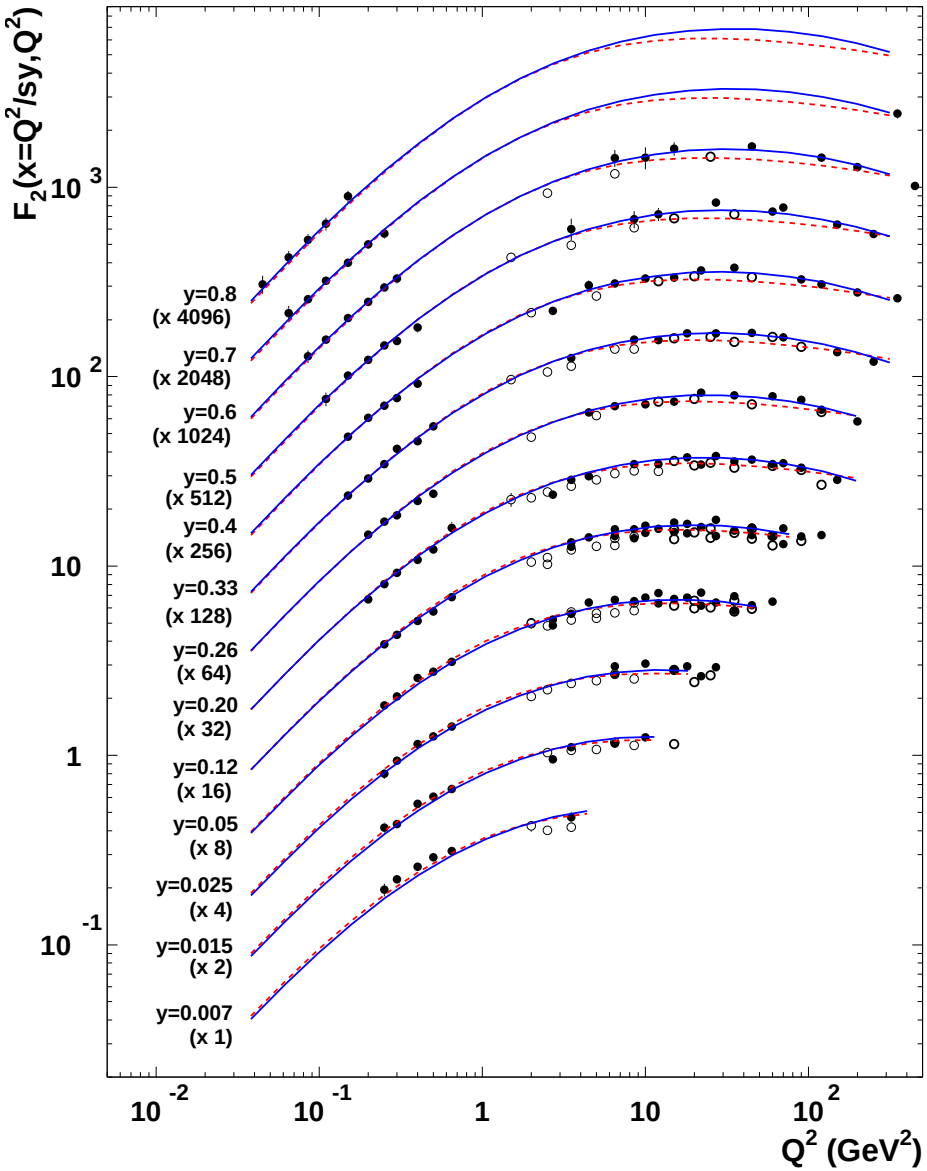

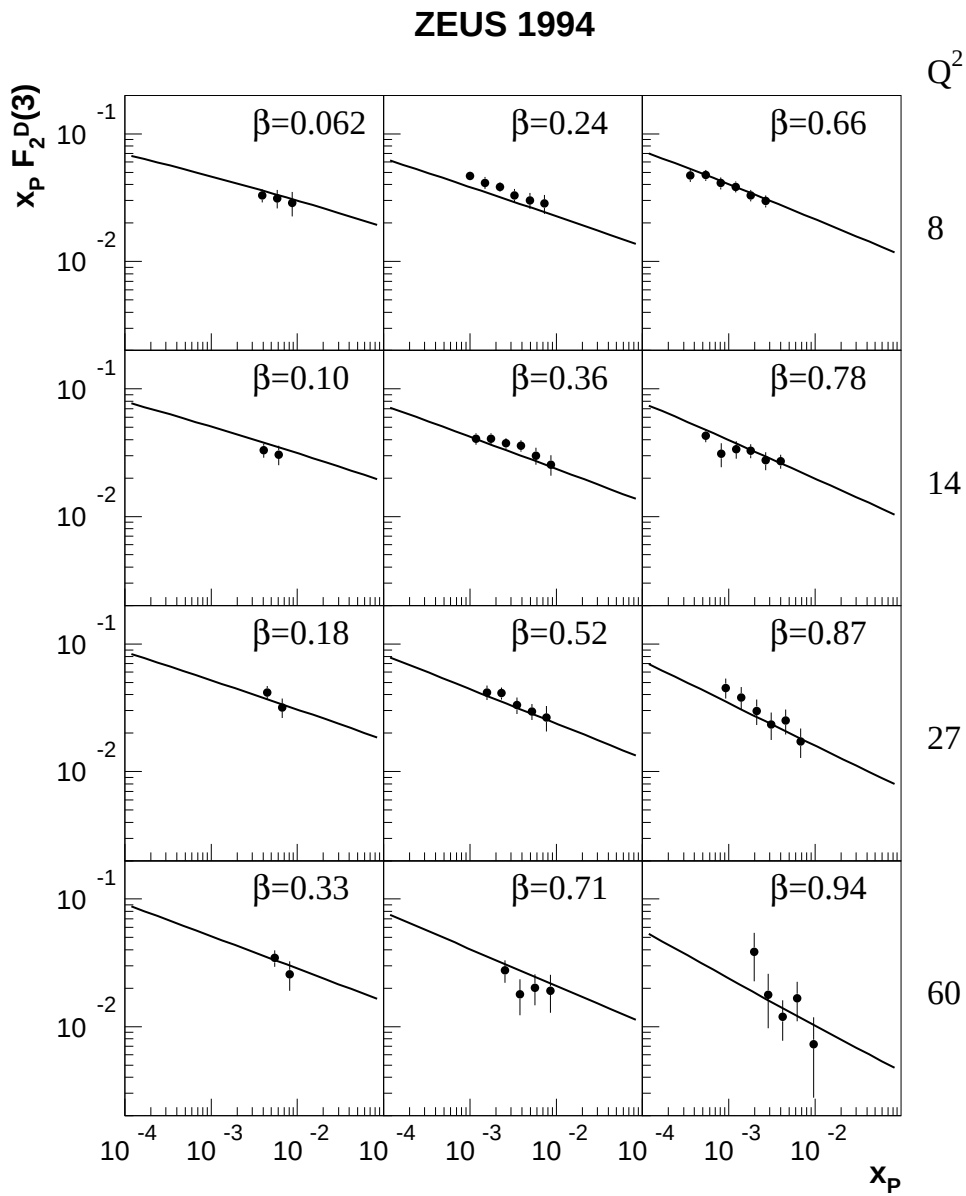

Constant ratio

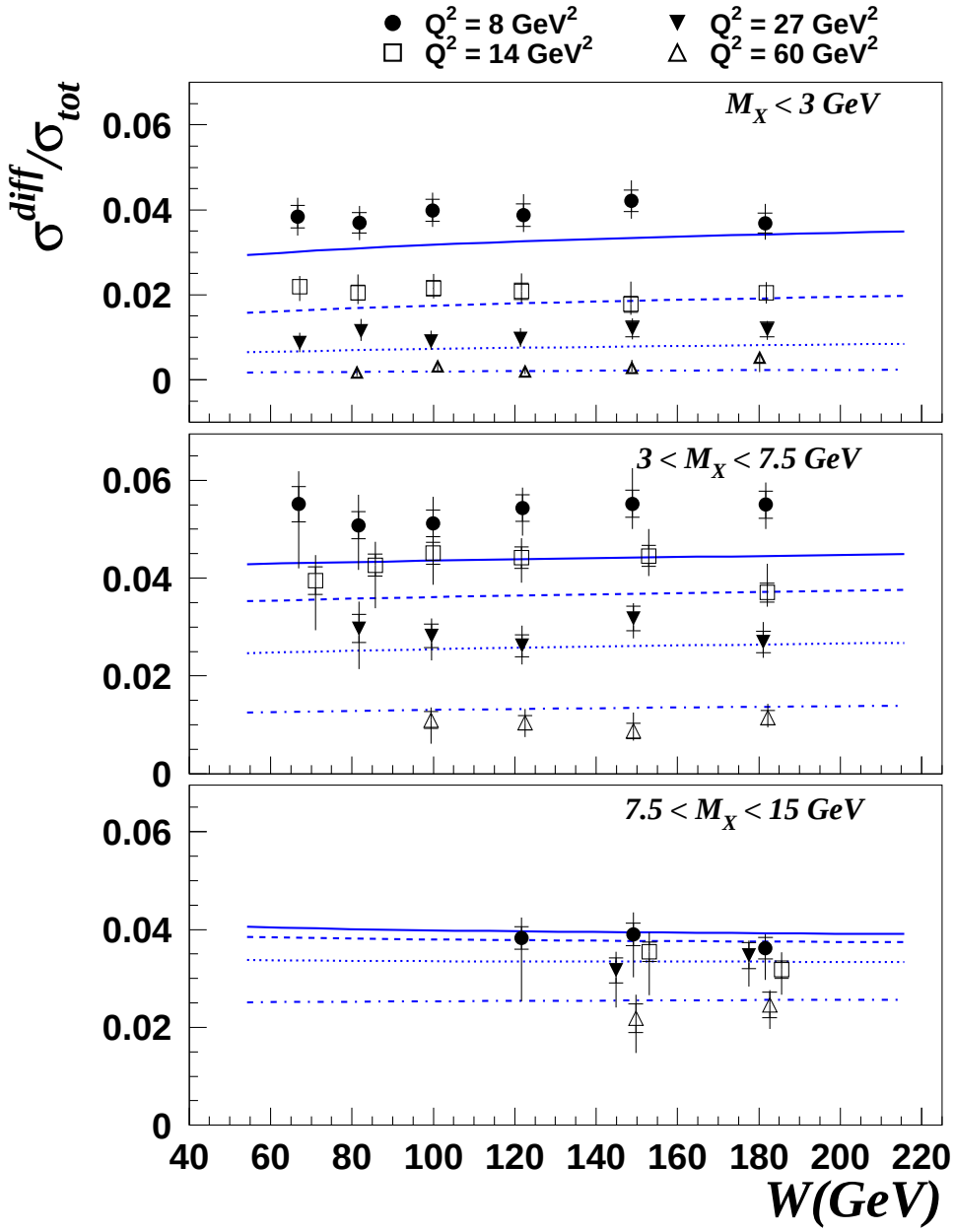

DPD from dipole approach - I

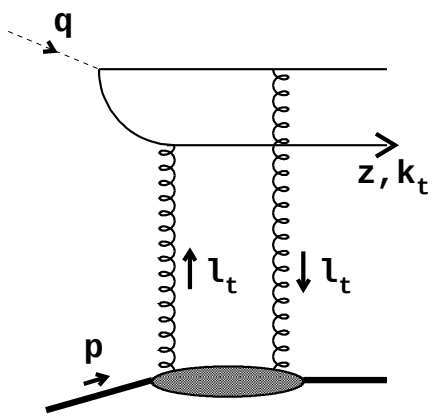

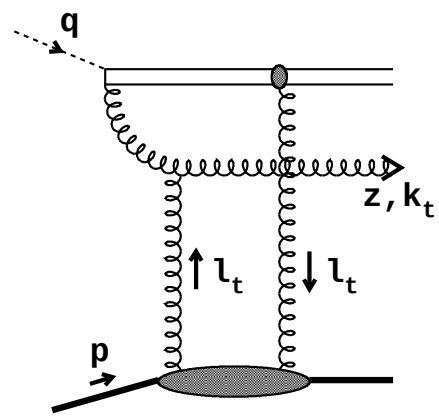

$$F_2^D = F_{q\bar{q}}^T + F_{q\bar{q}}^L + F_{q\bar{q}g}^T$$

- F_2^D contains all twists (powers of $1/Q^2$).
- $F_{q\bar{q}}^L \sim 1/Q^2$ dominates for $M^2 \ll Q^2$
- $F_{q\bar{q}g}^T$ dominates for $M^2 \gg Q^2$

DPD from dipole approach - II

- Extracting twist-2 contribution

$$F^T_{q\bar{q}} \quad \rightarrow \quad q^D(x_{I\!P}, \beta) \qquad \text{quark}$$

$$F^T_{q\bar{q}g} \quad \rightarrow \quad g^D(x_{I\!P}, \beta) \qquad \text{gluon}$$

- Regge factorization due to geometric scaling property of σ_{qq}

$$q^D \quad \sim \quad Q_s^2(x_{I\!P})\, q_{I\!P}(\beta) \quad \sim \quad x_{I\!P}^{-0.3}$$

$$g^D \quad \sim \quad Q_s^2(x_{I\!P})\, g_{I\!P}(\beta) \quad \sim \quad x_{I\!P}^{-0.3}$$

- as a result: $F_2^D \sim x_{I\!P}^{1-2\alpha_{I\!P eff}}$ $\quad => \quad$ $\alpha_{I\!P eff} \simeq 1.15$

DPD at initial scale $Q_0^2 = 1.5\ GeV^2$

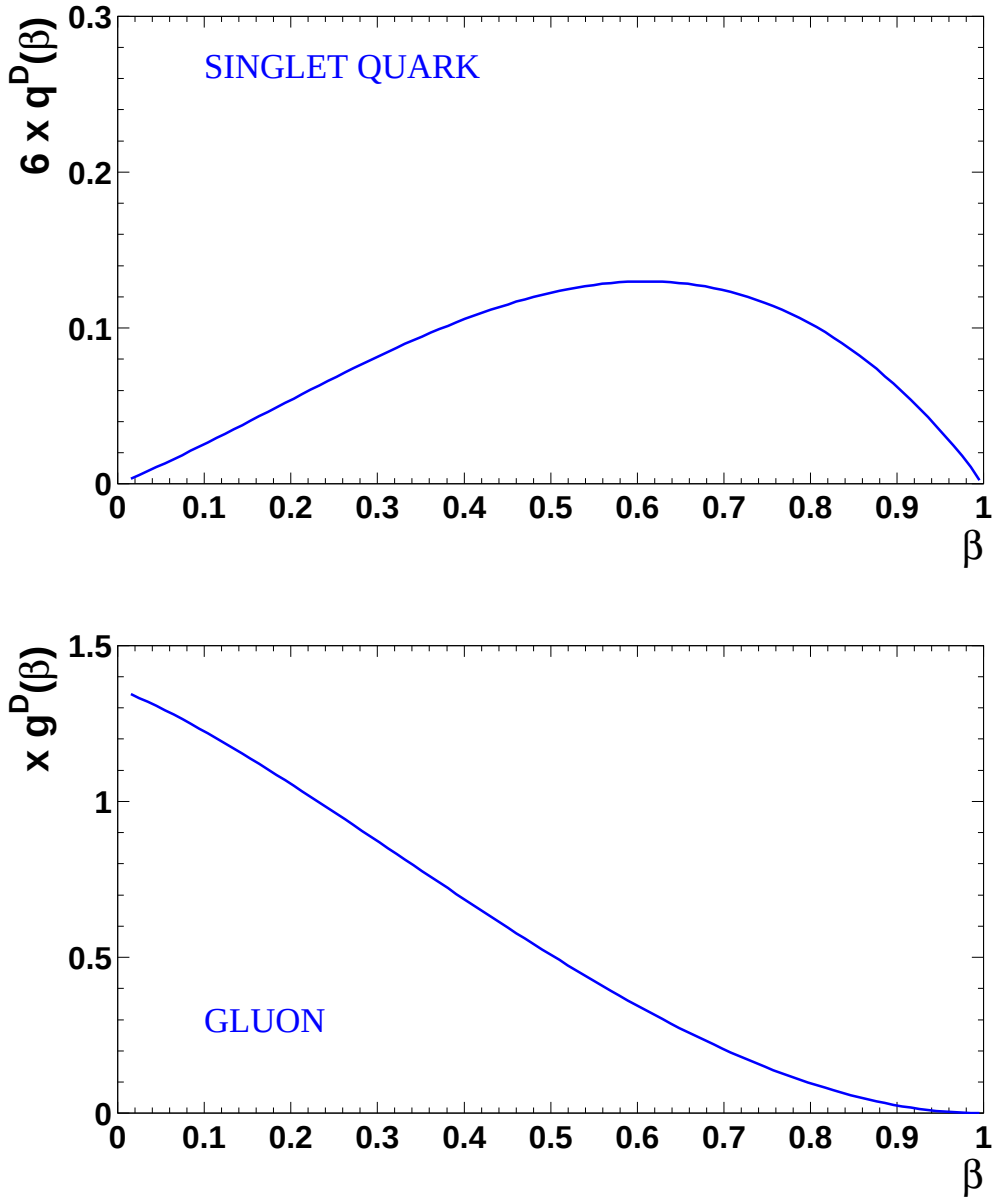

DPD from dipole approach - IV

H1 DATA (1994)

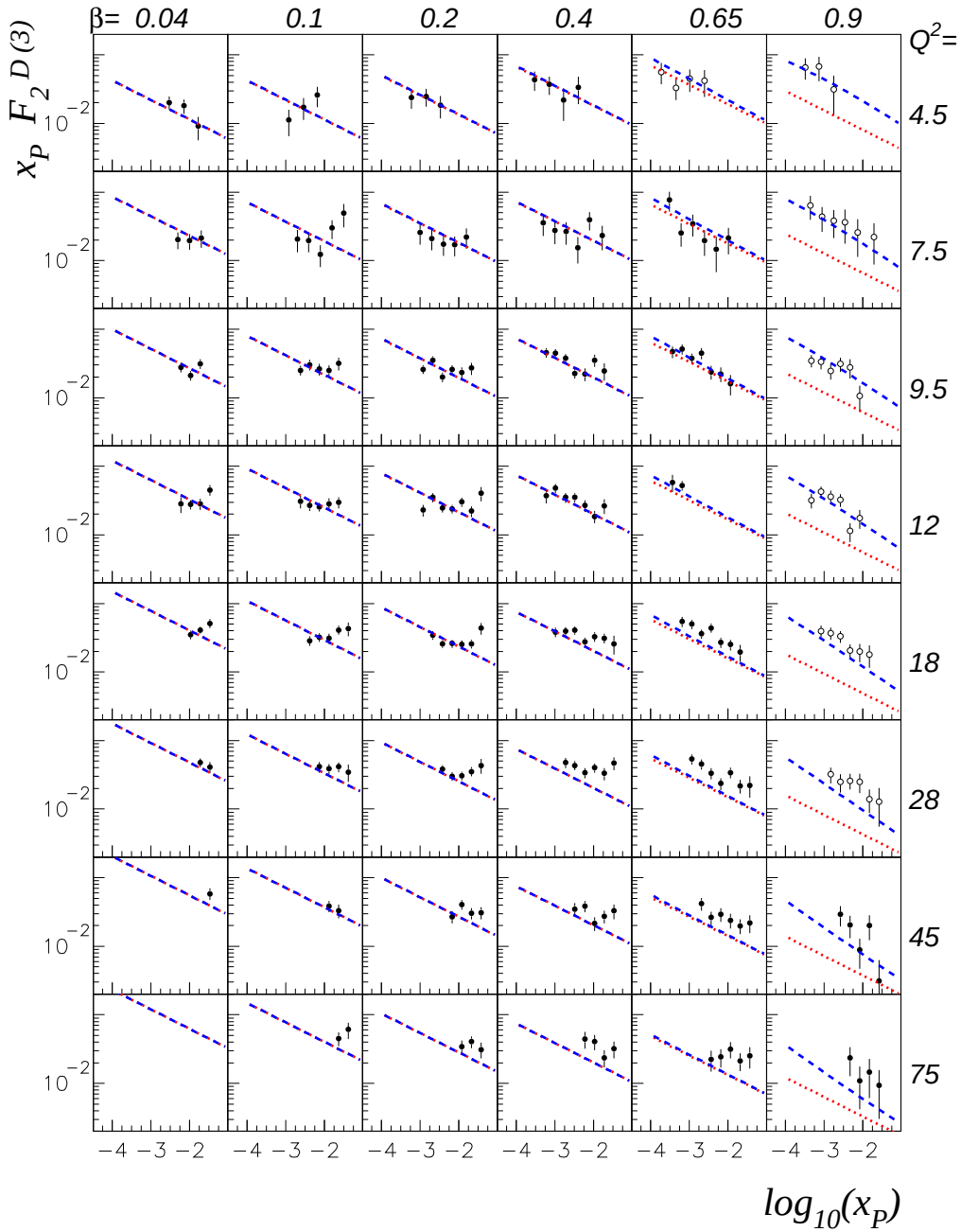

Summary

- Dipole approach with saturation provides a unified description of inclusive and diffractive data.
- Saturation scale and geometric scaling plays an essential role:
  - constant ratio $\sigma^{diff}/\sigma^{tot}$
  - twist analysis
  - Regge factorization
- More evidence from exclusive diffractive processes.