REV.	DESCRIPTION	DRAWN	DATE
		APPD.	DATE

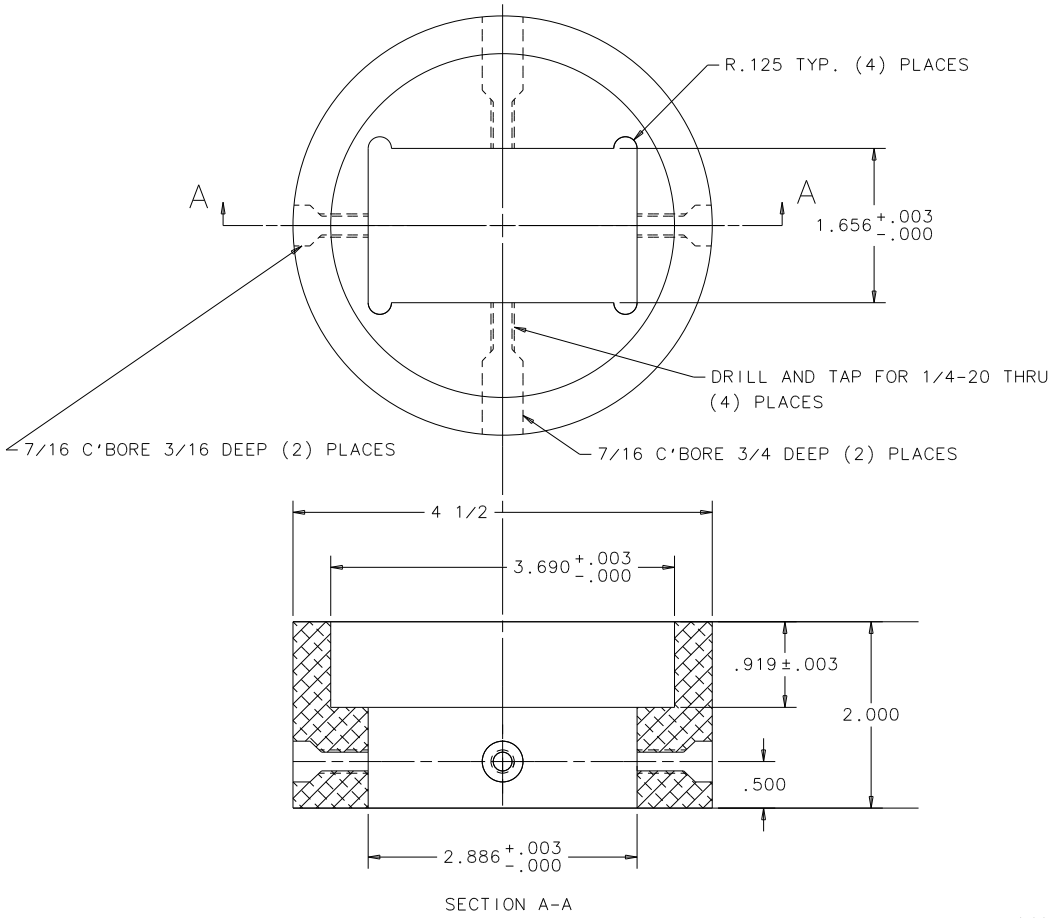

SECTION A-A

ITEM	PART NO.	DESCRIPTION OR SIZE	QTY.
PARTS LIST			

UNLESS OTHERWISE SPECIFIED			ORIGINATOR	N. OLIVEIRA
FRACTION			DRAWN	N. OLIVEIRA 07/00
± 1/64	±	±	CHECKED	
1. BREAK ALL SHARP EDGES 1/64 MAX.			APPROVED	
2. DO NOT SCALE DRAWING.			USED ON	
3. DIMENSIONS BASED UPON ANSI Y14.5M-1982.				
4. MAX. ALL MACH. SURFACES 125 √			MATERIAL	NYLON, PVC OR ALUMINUM

FERMI NATIONAL ACCELERATOR LABORATORY
UNITED STATES DEPARTMENT OF ENERGY

DETECTOR BOX JIG

SCALE	FILMED	DRAWING NUMBER	REV.
1:1			

cart_detector_jig.dwg
B size

CADFILE: CREATED WITH I-DEAS_VI USER NAME: NEWTONOL