REV.	DESCRIPTION	DRAWN	DATE
		APPD.	DATE

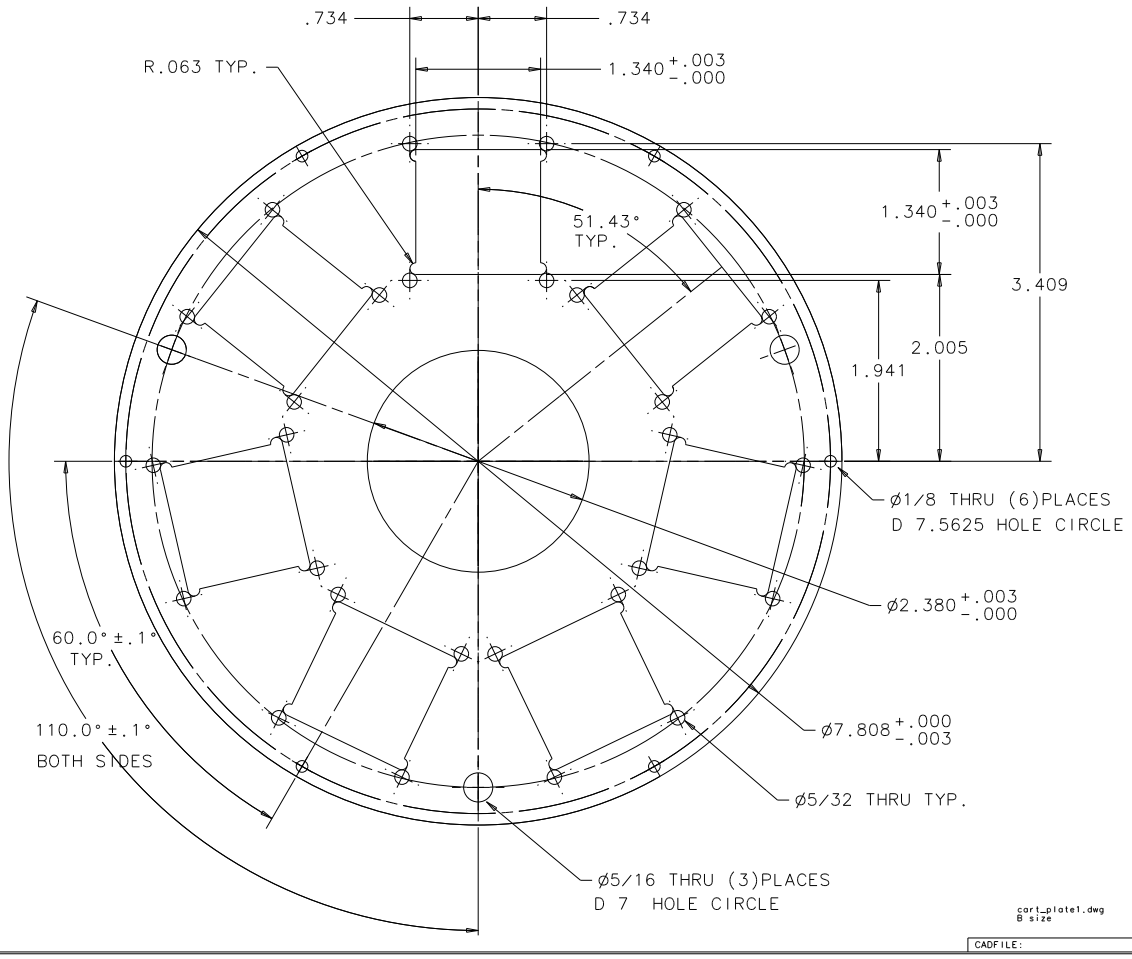

cart_plate1.dwg
B size

ITEM	PART NO.	DESCRIPTION OR SIZE	QTY.
PARTS LIST			

UNLESS OTHERWISE SPECIFIED			ORIGINATOR	N. OLIVEIRA	
FRACTION	DECIMAL	ANGLE	DRAWN	N. OLIVEIRA	07/00
± 1/256	± .003	± .05	CHECKED		
1. BREAK ALL SHARP EDGES 1/64 MAX.			APPROVED		
2. DO NOT SCALE DRAWING.			USED ON		
3. DIMENSIONS BASED UPON ANSI Y14.5M-1982.					
4. MAX. ALL MACH. SURFACES 63 √			MATERIAL 6061 ALUMINUM SHEET .19"THK.		

FERMI NATIONAL ACCELERATOR LABORATORY
UNITED STATES DEPARTMENT OF ENERGY

FPD CARTRIDGE PLATE 1

SCALE	FILMED	DRAWING NUMBER	REV.
1:1		9	

CADFILE:	CREATED WITH I-DEAS_VI	USER NAME: NEWTONOL