REV.	DESCRIPTION	DRAWN	DATE
		APPD.	DATE

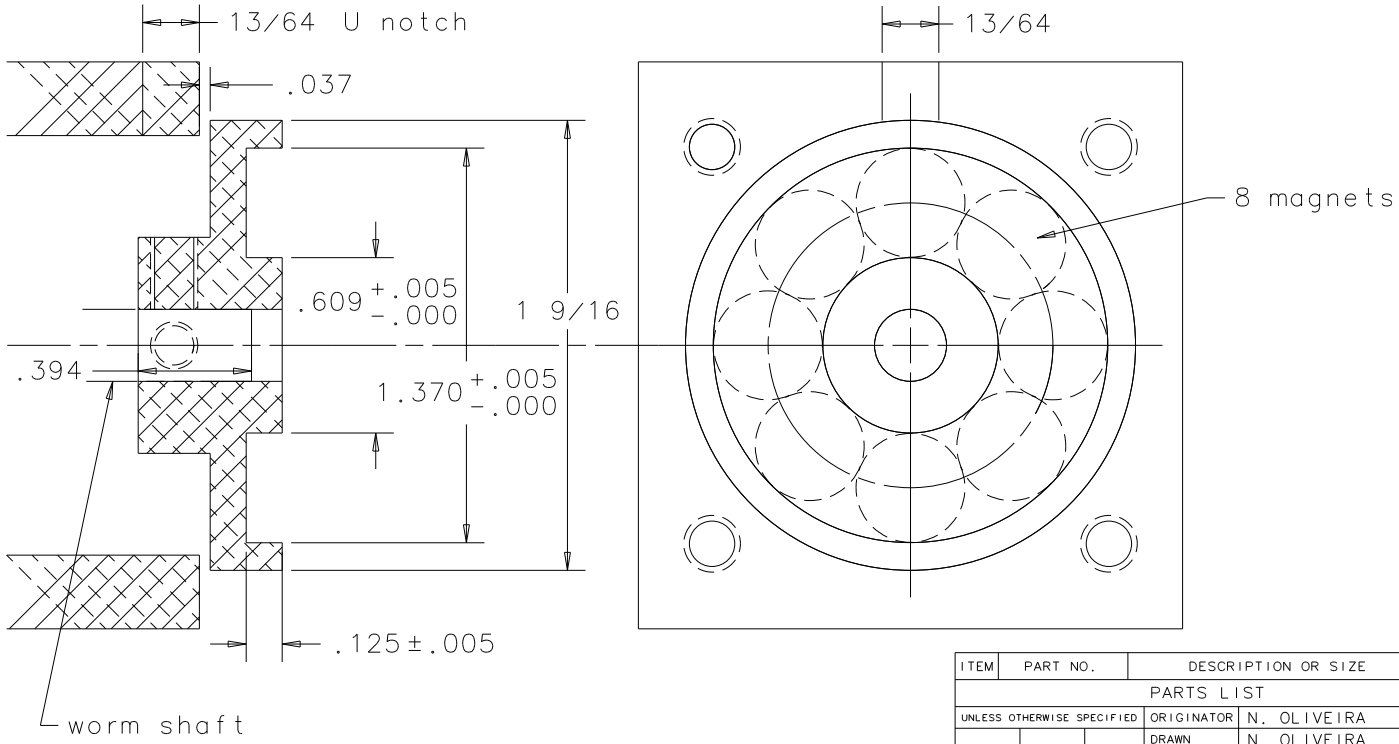

MATERIAL:
"BERG MANUFACTURE" GEAR BLANK
STOCK # PB66A-1.563
(2024T4 ALUMINUM ANODIZED)

encoder.dwg
A size

ITEM	PART NO.	DESCRIPTION OR SIZE	QTY.
PARTS LIST			

UNLESS OTHERWISE SPECIFIED			ORIGINATOR	N. OLIVEIRA	07/00
			DRAWN	N. OLIVEIRA	
±	±	±	CHECKED		
1. BREAK ALL SHARP EDGES 1/64 MAX.			APPROVED		
2. DO NOT SCALE DRAWING.			USED ON		
3. DIMENSIONS BASED UPON ANSI Y14.5M-1982					
4. MAX. ALL MACH. SURFACES √			MATERIAL		

FERMI NATIONAL ACCELERATOR LABORATORY
UNITED STATES DEPARTMENT OF ENERGY

ENCODER AT THE END
OF THE WORM

SCALE	FILMED	DRAWING NUMBER	REV.

CADFILE:	CREATED WITH I-DEAS_VI	USER NAME: NEWTONOL