REV.	DESCRIPTION	DRAWN	DATE
		APPD.	DATE

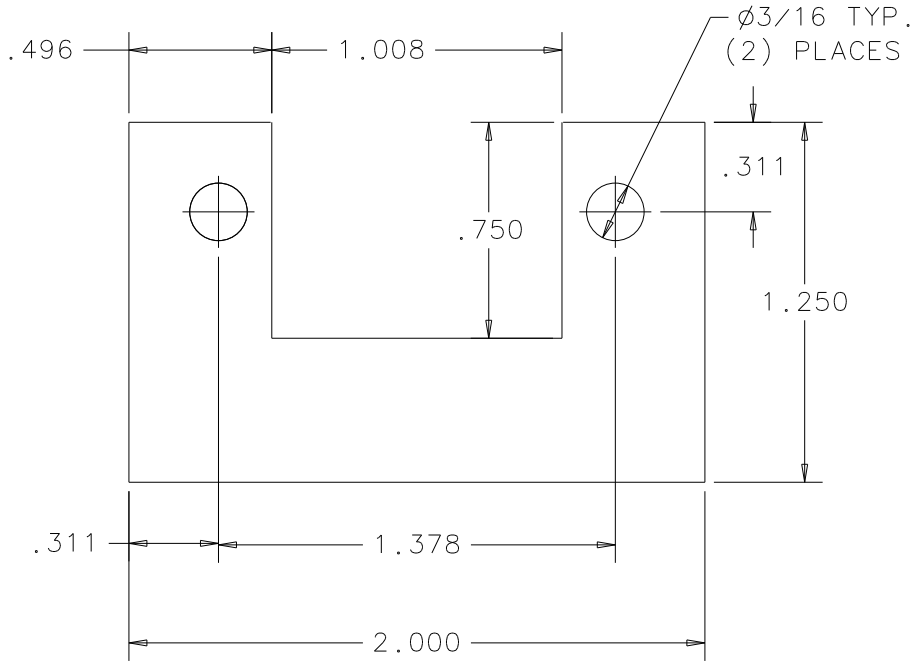

NOTE: Made from 1/16 grade CE Phenolic Laminate, Micarta or G-10

ITEM	PART NO.	DESCRIPTION OR SIZE	QTY.
PARTS LIST			

UNLESS OTHERWISE SPECIFIED			ORIGINATOR	N. OLIVEIRA	
	DECIMAL		DRAWN	N. OLIVEIRA	10/99
±	± .005	±	CHECKED		
1. BREAK ALL SHARP EDGES 1/64 MAX.			APPROVED		
2. DO NOT SCALE DRAWING.			USED ON		
3. DIMENSIONS BASED UPON ANSI Y14.5M-1982					
4. MAX. ALL MACH. SURFACES 125 √			MATERIAL		

FERMI NATIONAL ACCELERATOR LABORATORY
UNITED STATES DEPARTMENT OF ENERGY

FPD HALL SENSOR GUIDE PLATE

encoder2_2.dwg
A size

SCALE	FILMED	DRAWING NUMBER	REV.
2:1			

CADFILE:	CREATED WITH I-DEAS_VI	USER NAME: NEWTONOL