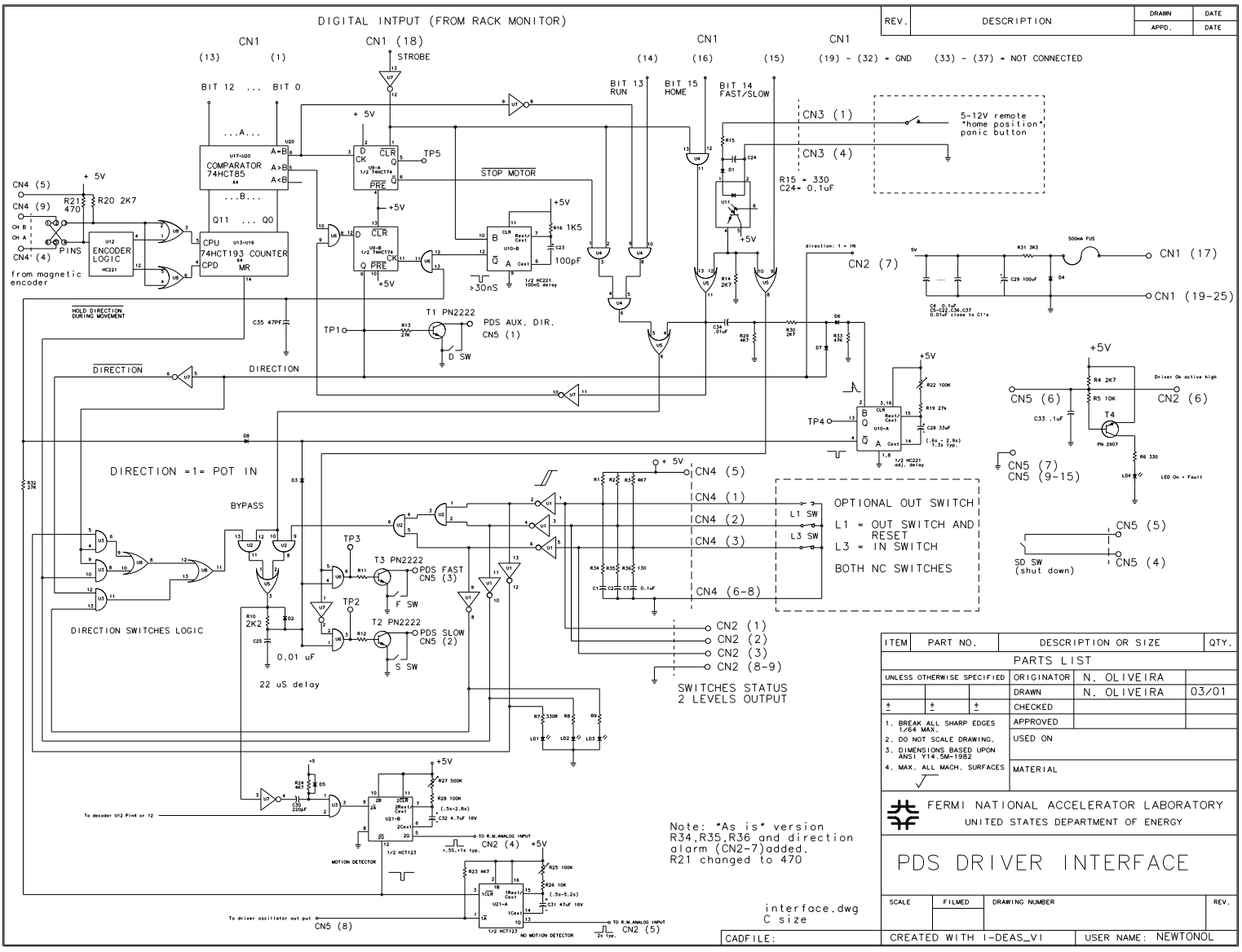
DIGITAL INTPUT (FROM RACK MONITOR)
CN1 (13) (1)
CN1 (18)
STROBE
BIT 12 ... BIT 0
BIT 13 RUN
BIT 15 HOME
BIT 14 FAST/SLOW
CN1 (14) (16) (15)
CN1 (19) - (32) = GND (33) - (37) = NOT CONNECTED
CN3 (1)
CN3 (4)
5-12V remote "home position" panic button
R15 = 330
C24= 0.1uF
COMPARATOR 74HCT85
74HCT193 COUNTER
ENCODER LOGIC
CN4 (5)
CN4 (9)
CN4' (4)
PINS
from magnetic encoder
HOLD DIRECTION DURING MOVEMENT
STOP MOTOR
TP5
TP1
T1 PN2222
PDS AUX. DIR. CN5 (1)
D SW
DIRECTION
DIRECTION =1= POT IN
BYPASS
DIRECTION SWITCHES LOGIC
22 uS delay
0.01 uF
TP3
TP2
T3 PN2222
PDS FAST CN5 (3)
F SW
T2 PN2222
PDS SLOW CN5 (2)
S SW
CN4 (5)
CN4 (1)
CN4 (2)
CN4 (3)
CN4 (6-8)
L1 SW
L3 SW
OPTIONAL OUT SWITCH
L1 = OUT SWITCH AND RESET
L3 = IN SWITCH
BOTH NC SWITCHES
CN2 (1)
CN2 (2)
CN2 (3)
CN2 (8-9)
SWITCHES STATUS 2 LEVELS OUTPUT
direction: 1 = IN
CN2 (7)
CN1 (17)
CN1 (19-25)
500mA FUS
TP4
CN5 (6)
CN2 (6)
Driver On active high
CN5 (7)
CN5 (9-15)
CN5 (5)
CN5 (4)
SD SW (shut down)
LED On + Fault
MOTION DETECTOR
NO MOTION DETECTOR
To decoder U12 Pin4 or 12
To driver oscillator out put
CN5 (8)
CN2 (4)
CN2 (5)
TO R_M_ANALOG INPUT
Note: "As is" version R34,R35,R36 and direction alarm (CN2-7) added. R21 changed to 470
interface.dwg
C size
CADFILE:
REV. DESCRIPTION DRAWN DATE APPD. DATE
ITEM PART NO. DESCRIPTION OR SIZE QTY.
PARTS LIST
UNLESS OTHERWISE SPECIFIED
ORIGINATOR N. OLIVEIRA
DRAWN N. OLIVEIRA 03/01
CHECKED
APPROVED
USED ON
MATERIAL
1. BREAK ALL SHARP EDGES 1/64 MAX.
2. DO NOT SCALE DRAWING.
3. DIMENSIONS BASED UPON ANSI Y14.5M-1982
4. MAX. ALL MACH. SURFACES
FERMI NATIONAL ACCELERATOR LABORATORY
UNITED STATES DEPARTMENT OF ENERGY
PDS DRIVER INTERFACE
SCALE FILMED DRAWING NUMBER REV.
CREATED WITH I-DEAS_VI
USER NAME: NEWTONOL