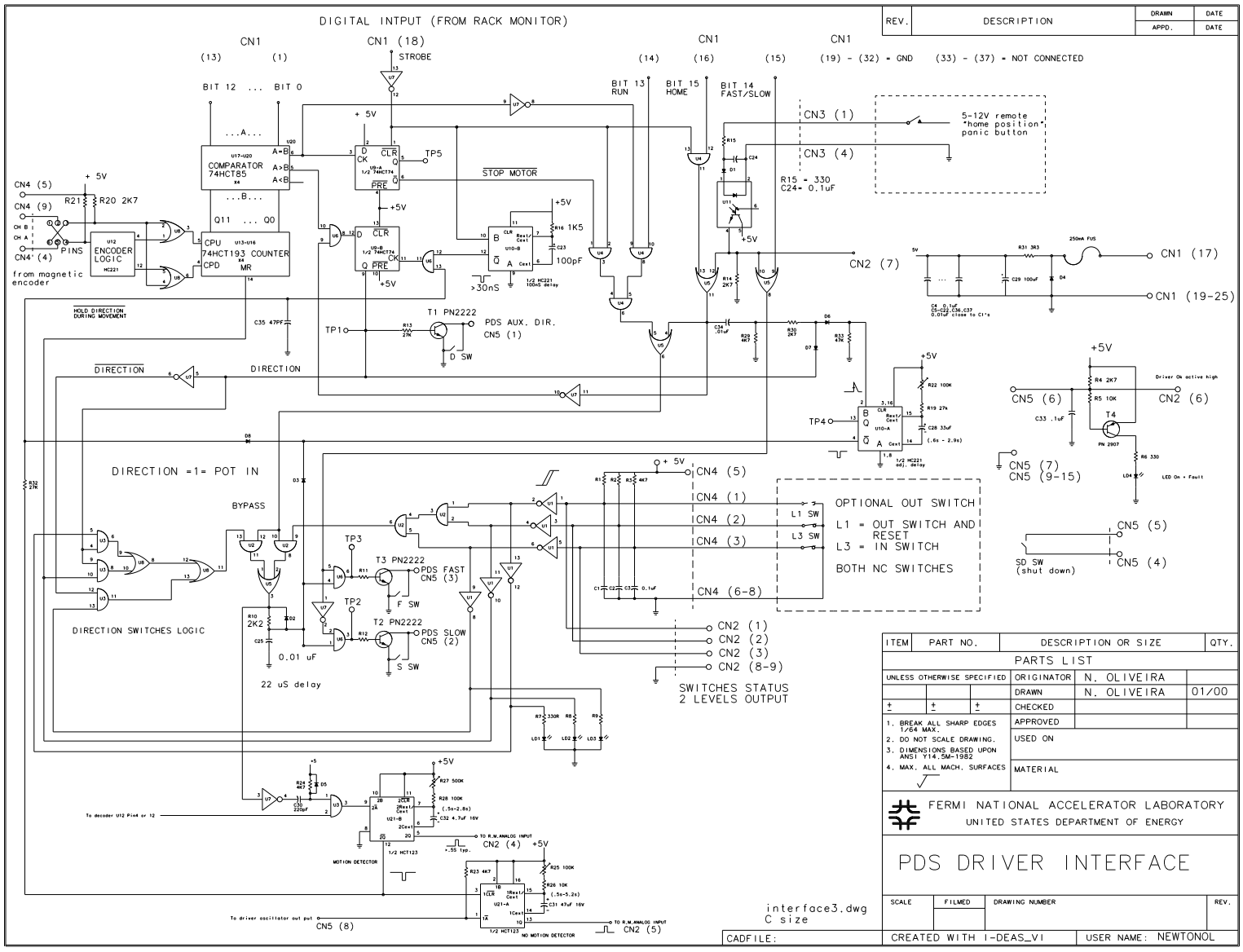

REV.	DESCRIPTION	DRAWN	DATE
		APPD.	DATE

ITEM	PART NO.	DESCRIPTION OR SIZE	QTY.
PARTS LIST			

UNLESS OTHERWISE SPECIFIED	ORIGINATOR	N. OLIVEIRA
	DRAWN	N. OLIVEIRA 01/00
± ± ±	CHECKED	
1. BREAK ALL SHARP EDGES 1/64 MAX.	APPROVED	
2. DO NOT SCALE DRAWING.	USED ON	
3. DIMENSIONS BASED UPON ANSI Y14.5M-1982		
4. MAX. ALL MACH. SURFACES	MATERIAL	

FERMI NATIONAL ACCELERATOR LABORATORY
UNITED STATES DEPARTMENT OF ENERGY

PDS DRIVER INTERFACE

SCALE	FILMED	DRAWING NUMBER	REV.

interface3.dwg
C size

CADFILE: | CREATED WITH I-DEAS_VI | USER NAME: NEWTONOL