Revision	Description	Date

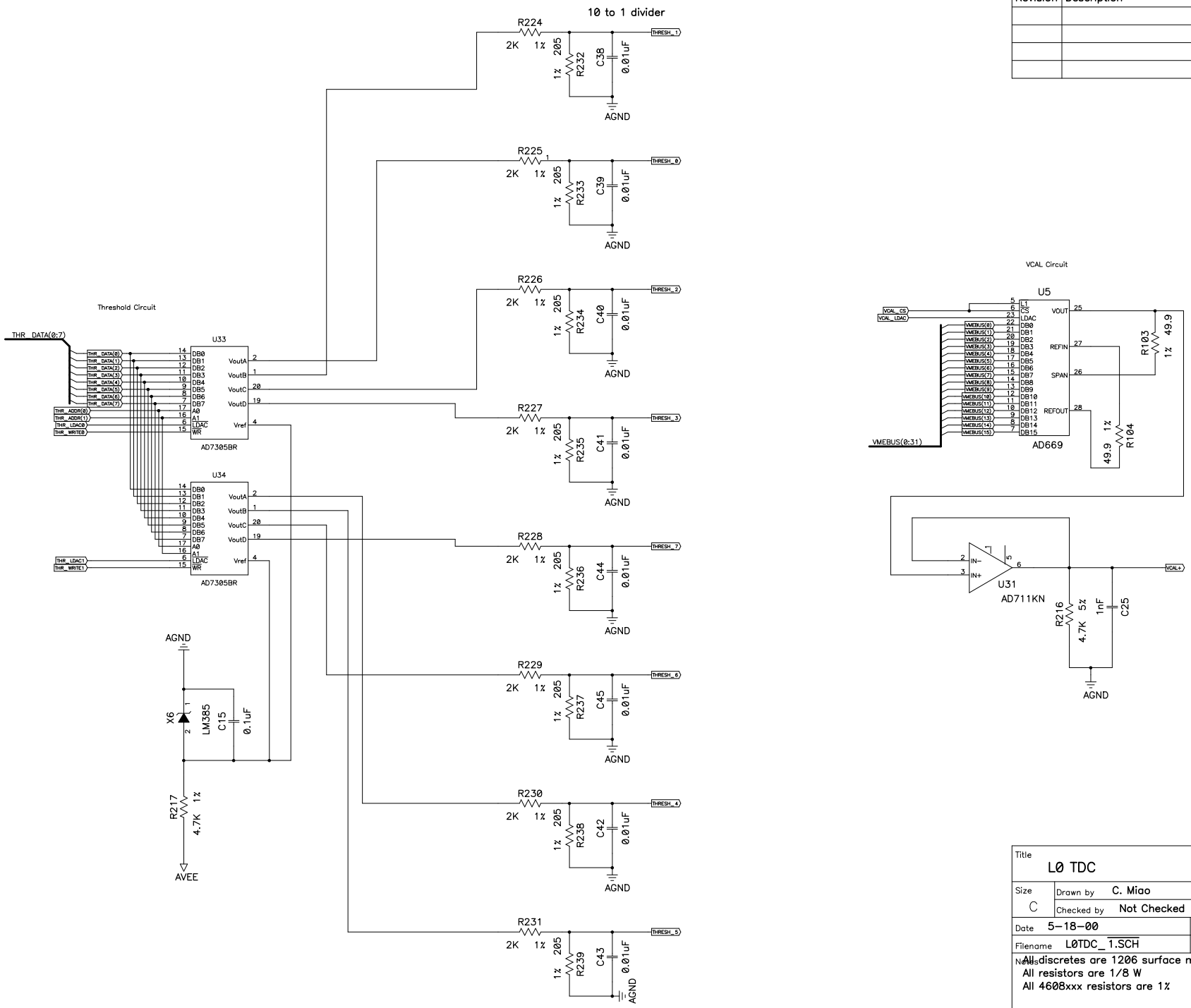

Title	L0 TDC	VCAL & THRESH
Size C	Drawn by C. Miao	Revision 4
	Checked by Not Checked	
Date 5-18-00	Brown University	
Filename L0TDC_1.SCH	Sheet 8 of 21	

Notes:
All discretes are 1206 surface mount
All resistors are 1/8 W
All 4608xxx resistors are 1%