REV.	DESCRIPTION	DRAWN	DATE
		APPD.	DATE

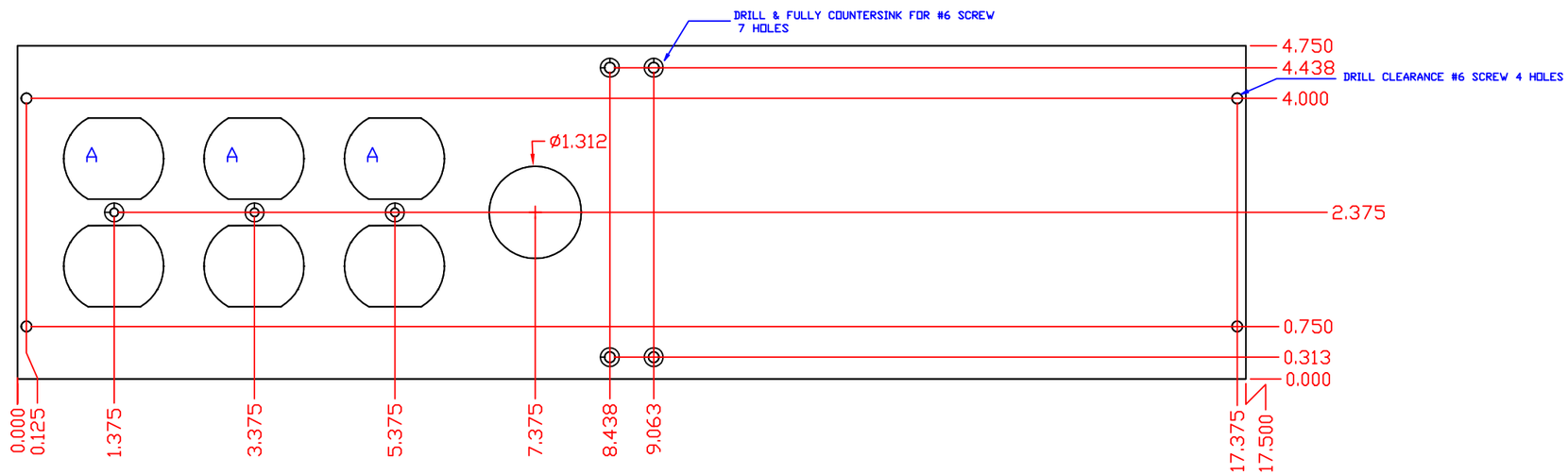

A-STANDARD DUPLEX CUTOUT.

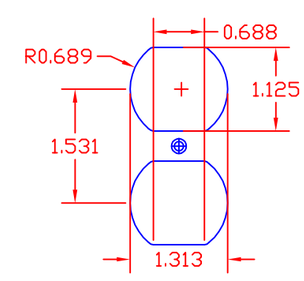

NOTE: FINISH WITH ELECTRICALLY CONDUCTIVE
PROTECTIVE COATING IRIDITE #14-2 AL-COAT,
ALODINE No. 1200S, OR EQUAL.
FINISH COLOR MUST BE UNIFORM.

ITEM	PART NO.	DESCRIPTION OR SIZE	QTY.
PARTS LIST			

UNLESS OTHERWISE SPEC.	DRAWN	D. L. HUFFMAN	9/11/89
FRACTIONS / DECIMALS / ANGLES	CHECKED		
	APPROVED		
	USED ON		
	MATERIAL: 6061-T6 ALUM. 1/8"		

FERMI NATIONAL ACCELERATOR LABORATORY
UNITED STATES DEPARTMENT OF ENERGY

DO SYSTEM CALORIMETERY
PREAMP BOX AREA AC POWER BACK PANEL

SCALE	FINISH	DRAWING NUMBER	REV.
1:1		3740.412-MD-286089	