Figure 6

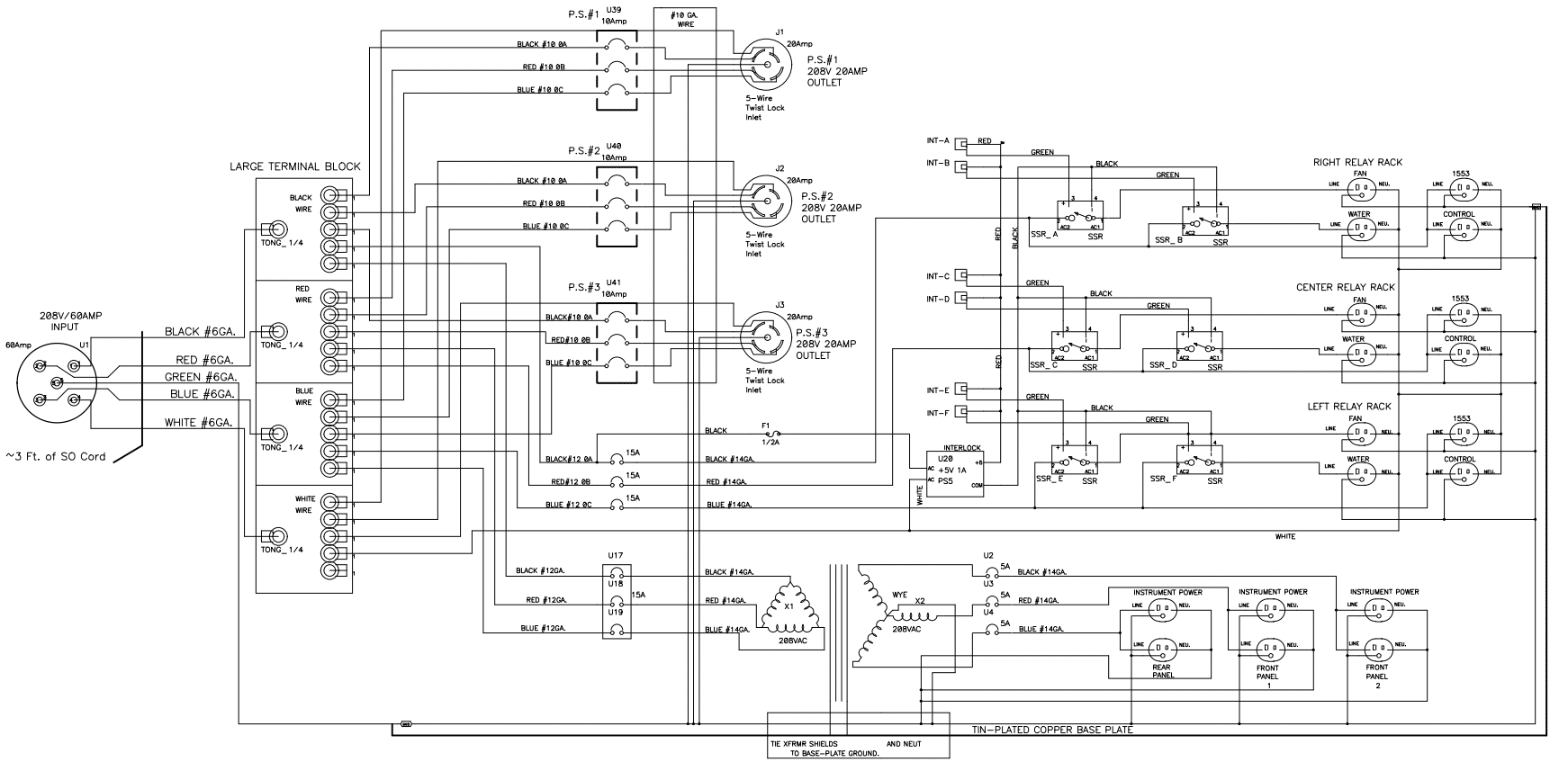

Title 14:28:00 Wed Apr 11 2001 POWER DISTRIBUTION CHASSIS		
Size D	Number 3740.412-ED-286115b	Rev D
Date March 1, 2000	David L. Huffman	
Filenameed286115b.SCH	Sheet 1 of 1	