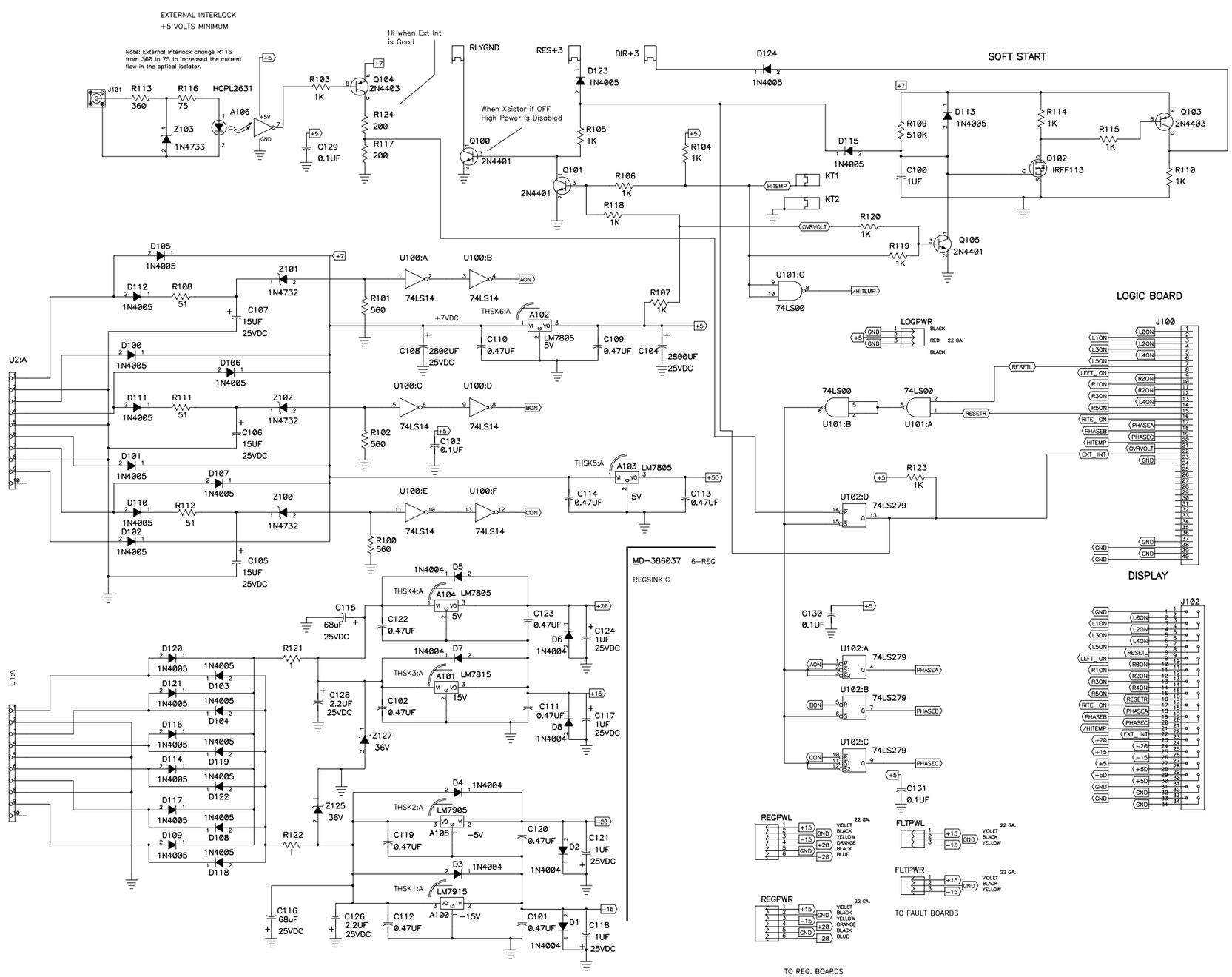
EXTERNAL INTERLOCK
+5 VOLTS MINIMUM
Note: External Interlock change R116 from 360 to 75 to increased the current flow in the optical isolator.
Hi when Ext Int is Good
When Xsistor if OFF High Power is Disabled
RLYGND
RES+3
DIR+3
SOFT START
LOGIC BOARD
DISPLAY
MD-386037 6-REG
REGSINK:C
LOGPWR
REGPWL
REGPWR
FLTPWL
FLTPWR
TO REG. BOARDS
TO FAULT BOARDS
Title 09:24:48 Tue Jun 25 2002
Control Power Board
Size D
Number 3740.412-ED-286060
Rev F
Date 06/25/2002
David L. Huffman
Filename Blsctl.sch
Sheet 1 of 2

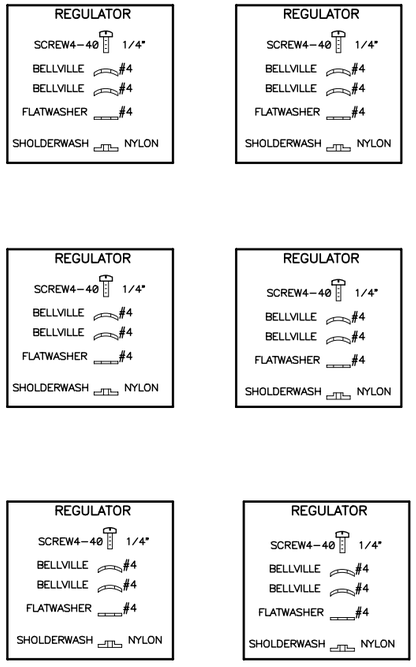

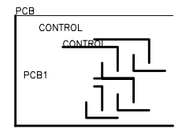

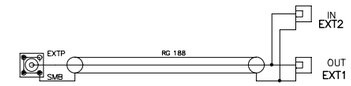

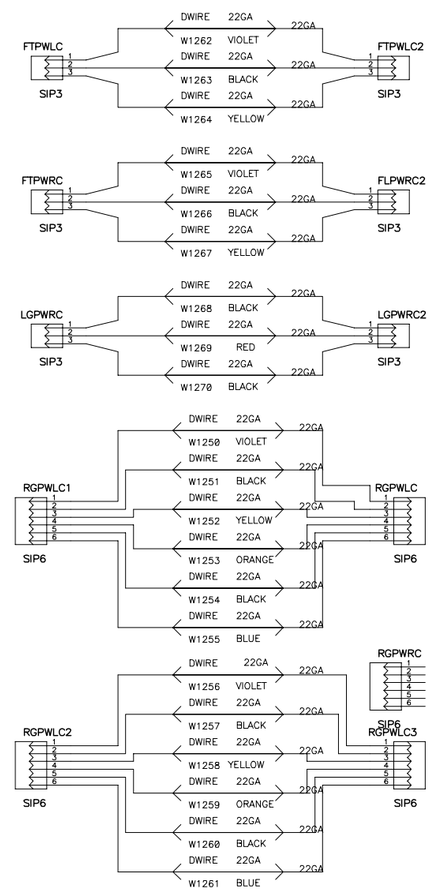

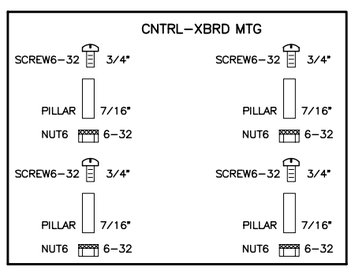

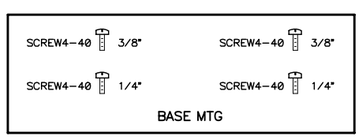

Title	09:25:05 Tue Jun 25 2002 Control Power Board	
Size D	Number	Rev F
Date 06/25/2002		David L. Huffman
Filename Blsctl.sch		Sheet 2 of 2