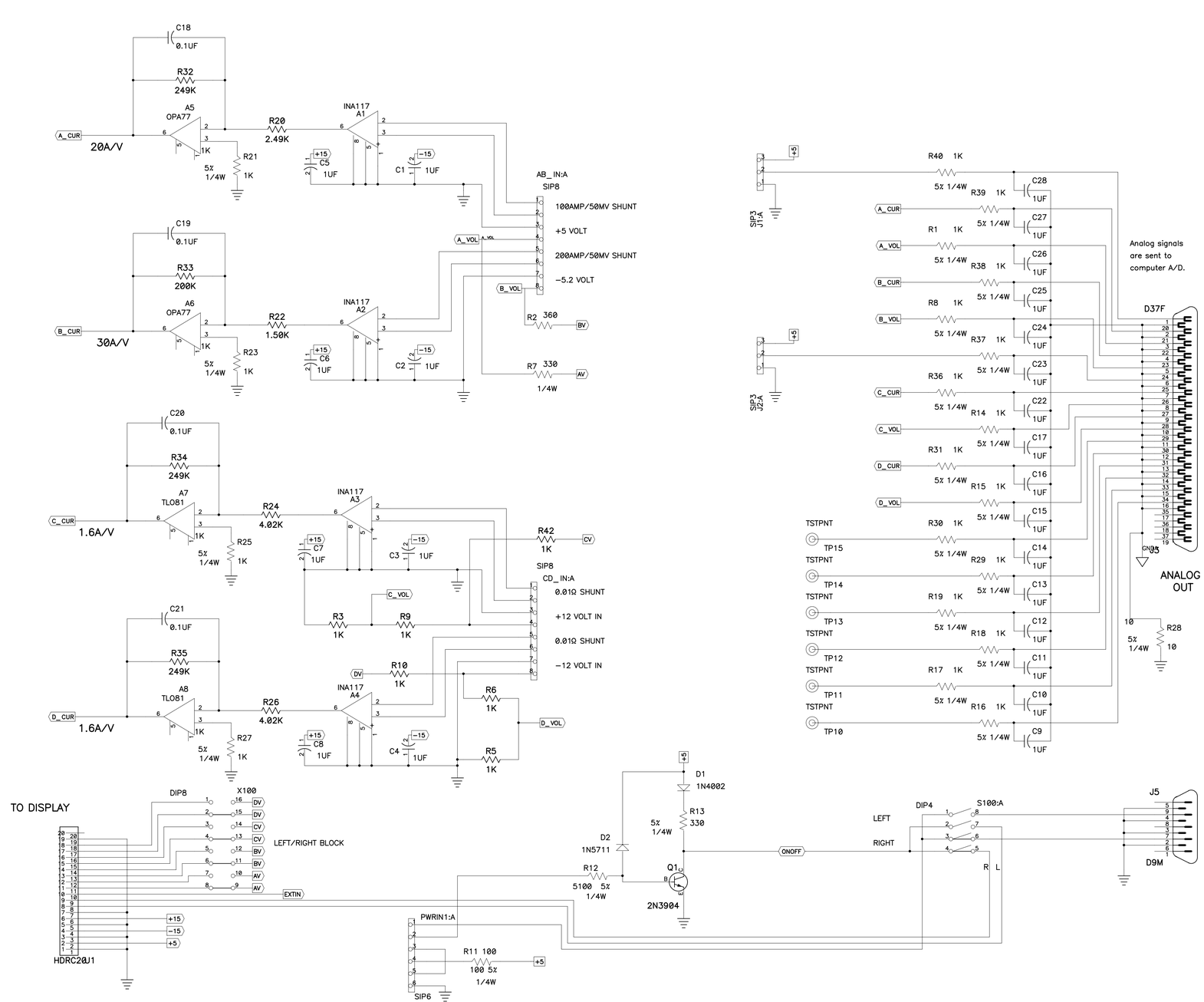

Title	CETEC MONITOR BOARD
Size	D
Number	3740.412-ED-286116
Rev	A
Date	2001 12 27 13:02
Drawn by	DAVID L. HUFFMAN
Filename	cetec.sch
Sheet	1 of