REVISIONS				
ZONE	REV	DESCRIPTION	DATE	APPROVED

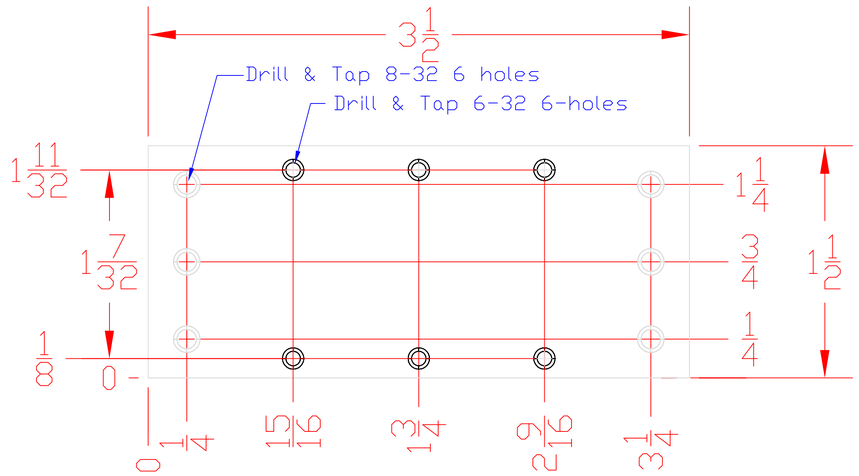

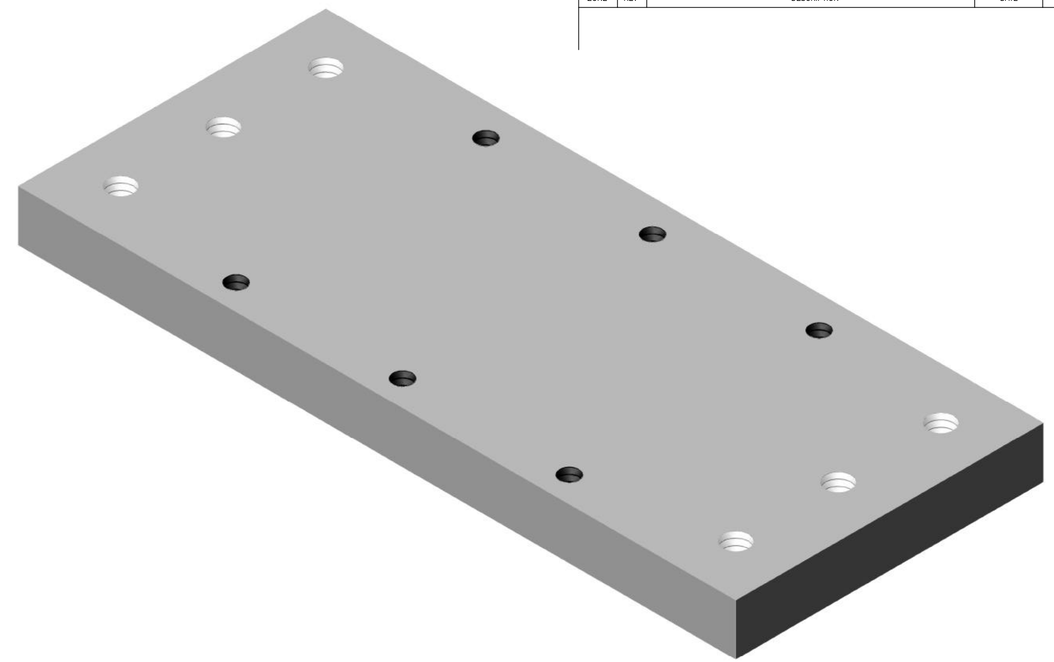

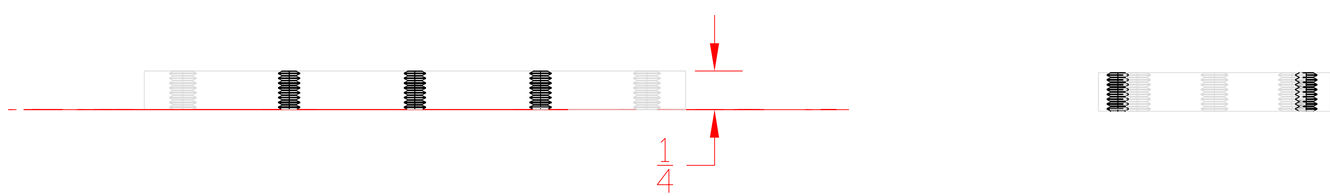

PPD/ETT Infrastructure Electronics Group	FERMI NATIONAL ACCELERATOR LABORATORY UNITED STATES DEPARTMENT OF ENERGY	
	ECAL Diode Bus Plate	
David L. Huffman	SIZE / FSCM NO.	DWG NO. / REV
diode_bus_6b	SCALE 1:1	SHEET