DWG. NO.	SH.	REV

REVISIONS 04/15/2002 03:03:04 PM

REV	DESCRIPTION	DATE	APPROVED

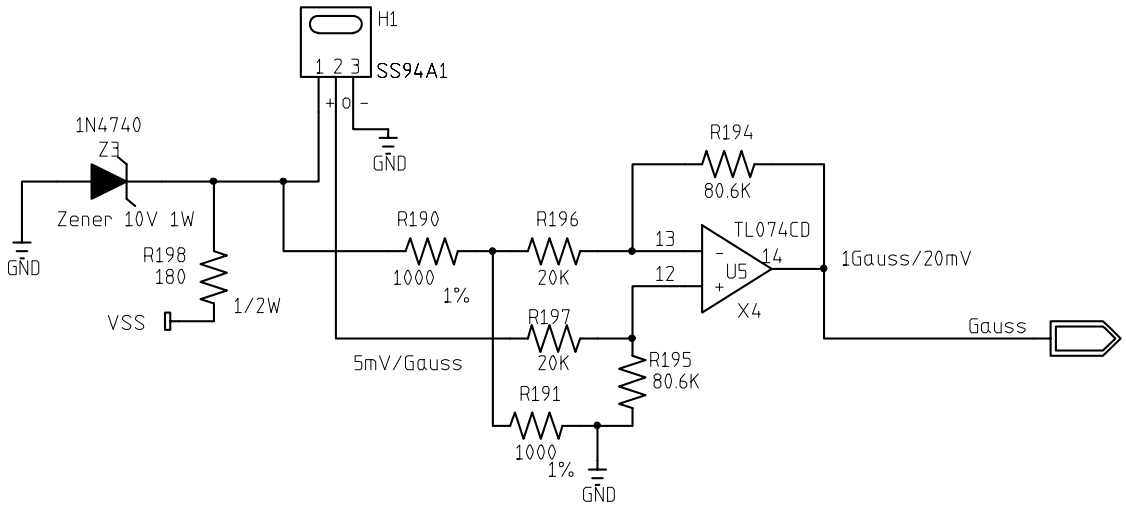

CONTRACT NO.		Calorimeter Upgrade			
APPROVALS	DATE	Preamp Power Supply Monitor Board Hall Sensor			
DRAWN					
CHECKED	99-09-28	SIZE A	FSCM NO.	DWG. NO. 3823.121.EA-330273-2	REV
ISSUED					
		SCALE		SHEET 01	

H=2LA; V=2LA