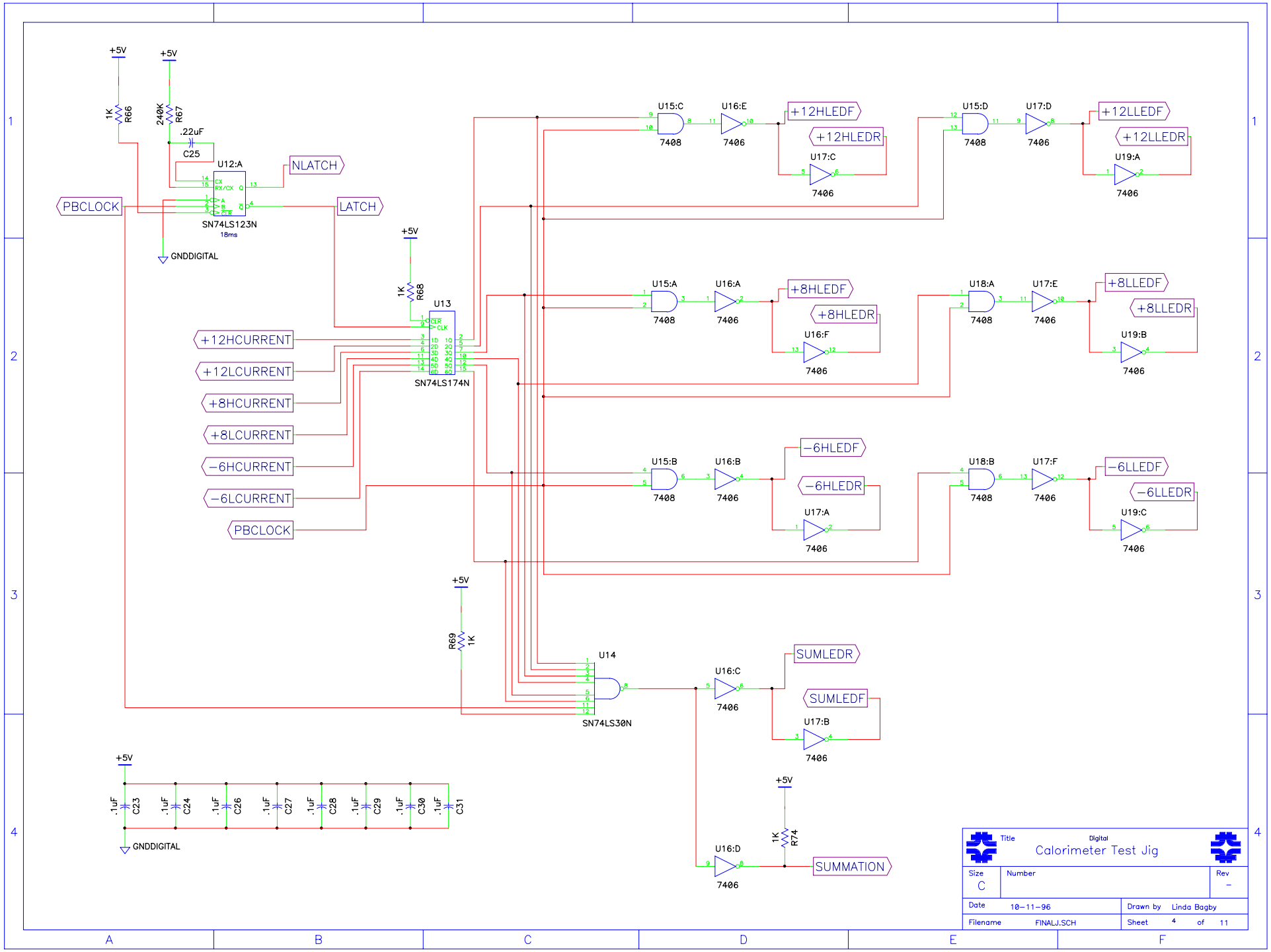
+5V
1K
R66
240K
R67
.22uF
C25
U12:A
SN74LS123N
18ms
NLATCH
PBCLOCK
LATCH
GNDDIGITAL
1K
R68
U13
SN74LS174N
+12HCURRENT
+12LCURRENT
+8HCURRENT
+8LCURRENT
−6HCURRENT
−6LCURRENT
PBCLOCK
R69
1K
U14
SN74LS30N
U15:C
7408
U16:E
7406
+12HLEDF
+12HLEDR
U17:C
7406
U15:D
7408
U17:D
7406
+12LLEDF
+12LLEDR
U19:A
7406
U15:A
7408
U16:A
7406
+8HLEDF
+8HLEDR
U16:F
7406
U18:A
7408
U17:E
7406
+8LLEDF
+8LLEDR
U19:B
7406
U15:B
7408
U16:B
7406
−6HLEDF
−6HLEDR
U17:A
7406
U18:B
7408
U17:F
7406
−6LLEDF
−6LLEDR
U19:C
7406
U16:C
7406
SUMLEDR
SUMLEDF
U17:B
7406
U16:D
7406
1K
R74
SUMMATION
.1uF
C23
C24
C26
C27
C28
C29
C30
C31
Title
Digital
Calorimeter Test Jig
Size
C
Number
Rev
–
Date
10-11-96
Drawn by
Linda Bagby
Filename
FINALJ.SCH
Sheet
4
of
11