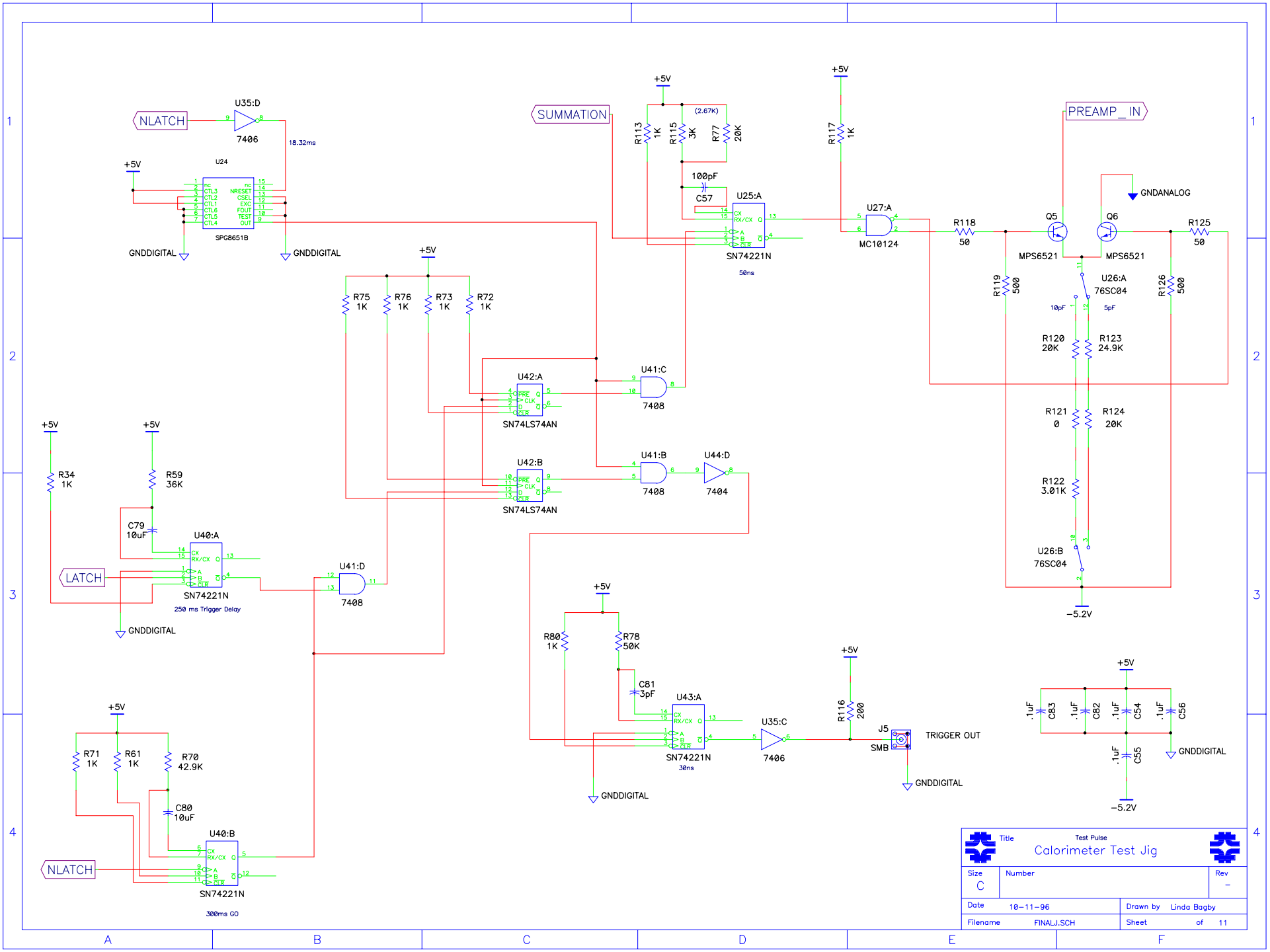
NLATCH
U35:D
7406
18.32ms
U24
SPG8651B
+5V
GNDDIGITAL
SUMMATION
R113 1K
R115 3K
(2.67K)
R77 20K
100pF
C57
U25:A
SN74221N
50ns
R117 1K
U27:A
MC10124
PREAMP_IN
GNDANALOG
R118 50
Q5
MPS6521
Q6
MPS6521
R125 50
R119 500
U26:A
76SC04
10pF
5pF
R126 500
R120 20K
R123 24.9K
R121 0
R124 20K
R122 3.01K
U26:B
76SC04
-5.2V
R75 1K
R76 1K
R73 1K
R72 1K
U42:A
SN74LS74AN
U41:C
7408
U42:B
SN74LS74AN
U41:B
7408
U44:D
7404
R34 1K
R59 36K
C79 10uF
U40:A
SN74221N
250 ms Trigger Delay
LATCH
U41:D
7408
R80 1K
R78 50K
C81 3pF
U43:A
SN74221N
30ns
U35:C
7406
R116 200
J5
SMB
TRIGGER OUT
.1uF C83
.1uF C82
.1uF C54
.1uF C56
.1uF C55
R71 1K
R61 1K
R70 42.9K
C80 10uF
U40:B
SN74221N
300ms GO
Title
Test Pulse
Calorimeter Test Jig
Size
C
Number
Rev
-
Date
10-11-96
Drawn by
Linda Bagby
Filename
FINALJ.SCH
Sheet
of
11