Control No. 975804A	To: FERMILAB	JTY / KTY Appr.
Last Revision 02	Part no. DO-CAL-PA-V2-C	Drawn By: 10/2/97 R.Bh

SCHEMATIC

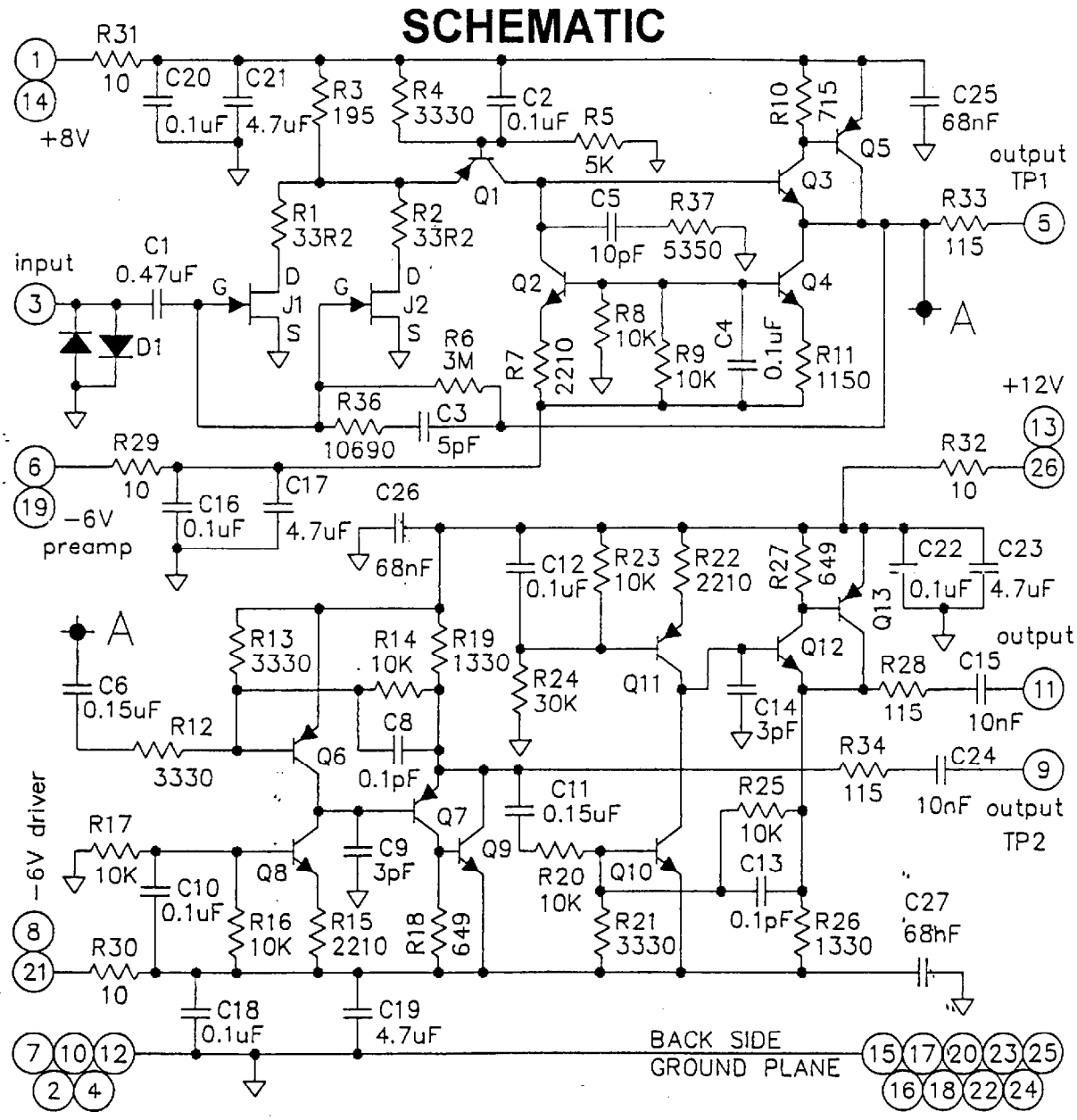

02 Rev. Change R3 from 178 to 195, R36 from 10692 to 10690, and R37 from 5346 to 5350. By / Date LB 6/15/98

Sheet 7 of 9

TAIYO YUDEN (U.S.A.) INC.