Control No. 975805A	To: FERMILAB	JTY / KTY Appr.
Last Revision 02	Part no. DO-CAL-PA-V2-D	Drawn By: 10/2/97

SCHEMATIC

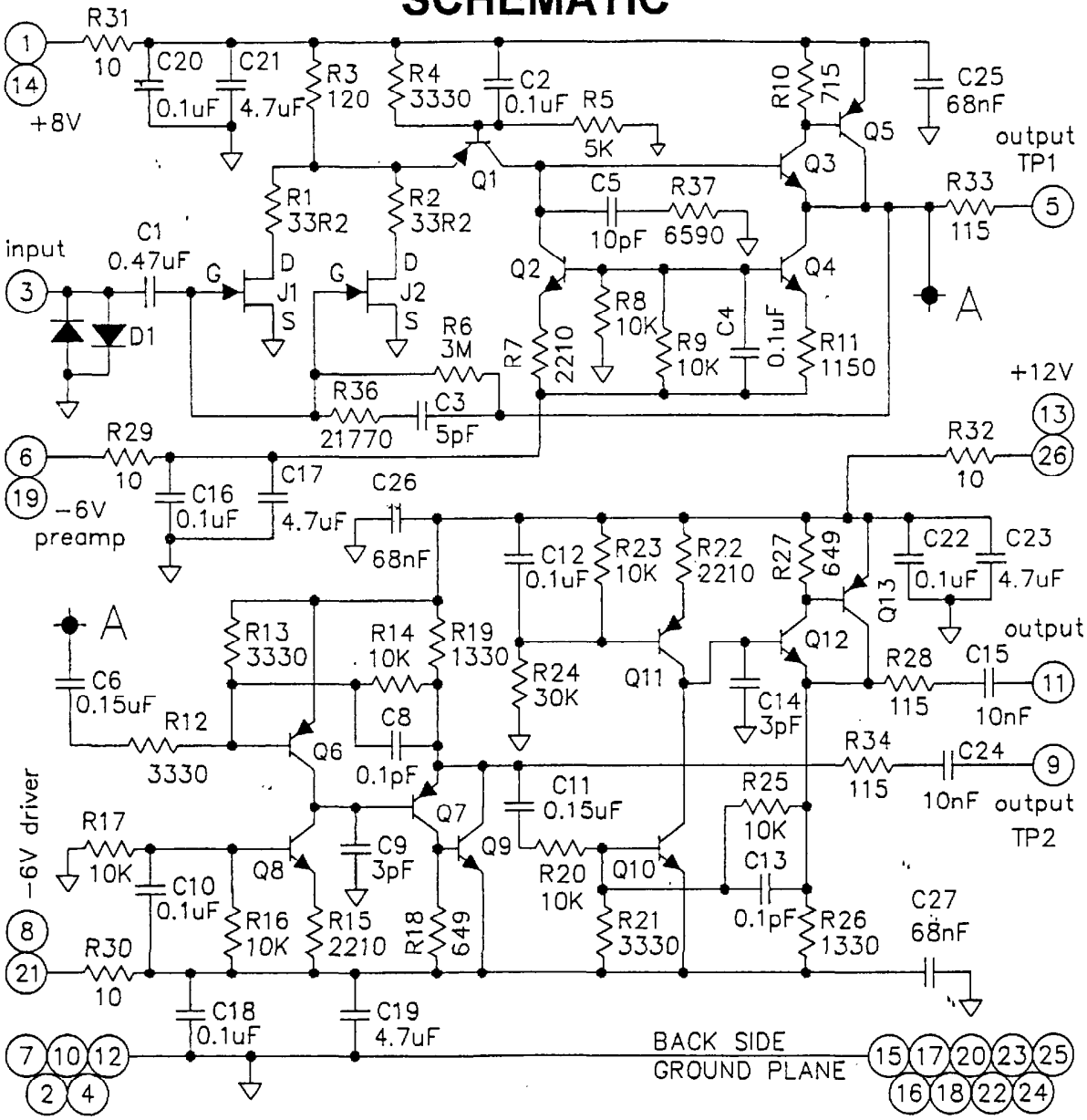

Rev.		By / Date
02	Change R3 from 178 to 120, R36 from 21768 to 21770, and R37 from 10884 to 6590.	RB 9/15/98

TAIYO YUDEN (U.S.A.) INC.

Control No. 975805A	To: FERMILAB	JTY / KTY Appr.
Last Revision 02	Part no. DO-CAL-PA-V2-D	Drawn By: 10/2/97

PARTS LIST

TAIYO YUDEN SPECIFICATION	REF. NO.	CUSTOMER SPECIFICATION
33.2 ±1% 50mW 150 PPM/°C	R1,2	33.2 ±1% 50mW 150 PPM/°C
120 ±1% 150mW 150 PPM/°C	R3	120 ±1% 150mW 150 PPM/°C
3330 ±1% 50mW 150 PPM/°C	R4,12,13,21	3330 ±1% 50mW 150 PPM/°C
5K ±1% 50mW 150 PPM/°C	R5	5K ±1% 50mW 150 PPM/°C
3M ±1% 50mW 150 PPM/°C	R6	3M ±1% 50mW 150 PPM/°C
2210 ±1% 50mW 150 PPM/°C	R7,15,22	2210 ±1% 50mW 150 PPM/°C
10K ±1% 50mW 150 PPM/°C	R8,9,14,16,17, 20,23,25	10K ±1% 50mW 150 PPM/°C
715 ±1% 50mW 150 PPM/°C	R10	715 ±1% 50mW 150 PPM/°C
1150 ±1% 50mW 150 PPM/°C	R11	1150 ±1% 50mW 150 PPM/°C
649 ±1% 50mW 150 PPM/°C	R18,27	649 ±1% 50mW 150 PPM/°C
1330 ±1% 50mW 150 PPM/°C	R19,26	1330 ±1% 50mW 150 PPM/°C
30K ±1% 50mW 150 PPM/°C	R24	30K ±1% 50mW 150 PPM/°C
115 ±1% 500mW 150 PPM/°C	R28,34	115 ±1% 500mW 150 PPM/°C
10 ±5% 50mW 250 PPM/°C	R29,30,31,32	10 ±5% 50mW 250 PPM/°C
115 ±1% 150mW 150 PPM/°C	R33	115 ±1% 150mW 150 PPM/°C
21770 ±1% 50mW 150 PPM/°C	R36	21770 ±1% 50mW 150 PPM/°C
6590 ±1% 50mW 150 PPM/°C	R37	6590 ±1% 50mW 150 PPM/°C
Supplied by Fermilab (EIA 0805)	C1	0.47µF ±10% X7R 16V 0805
Supplied by Fermilab (EIA 0805)	C2,4,10,12,16, 18,20,22	0.1µF -20% +80% Z5U 0805
Supplied by Fermilab (EIA 0805)	C6,11	0.15µF ±10% X7R 15V 0805
Supplied by Fermilab (EIA 0805)	C9,14	3pF ±0.5% NPO 0805
Supplied by Fermilab (EIA 0805)	C5	10pF NPO 0805
Supplied by Fermilab (EIA 0805)	C3	5pF NPO 0805
SOLDER PADS, note 1 (EIA 0805)	C8,13	USER INSTALLED 0805
Supplied by Fermilab (EIA 1210)	C15,24	0.01µF ±1% NPO 50V 1210
Supplied by Fermilab (EIA 1206)	C17,19,21,23	4.7µF -20/+80% 1206
Supplied by Fermilab (SOT-23)	D1	MMBD7000LT1 (Motorola) SOT-23
Supplied by Fermilab (SOT-23)	Q1,5,6,7,11	MMBTH81LT1 (Motorola) SOT-23
Supplied by Fermilab (SOT-23)	Q2,3,4,8,10,12	MMBTH10LT1 (Motorola) SOT-23
Supplied by Fermilab (SOT-23)	Q9	MMBT3904LT1 (Motorola) SOT-23
Supplied by Fermilab (SOT-23)	Q13	MMBT3906T (Motorola) SOT-23
Supplied by Fermilab (TO-92)	J1,2	2SK369-GR (Toshiba) TO-92
Supplied by Fermilab (EIA 0603)	C25,26,27	68nF -20%/+80% Z5V, Y5V 0603

Note 1, see Disclaimer Information sheet 1 of 9 paragraph four.

Rev.		By / Date
02	Change R3 from 178 to 120, R36 from 21768 to 21770, and R37 from 10884 to 6590.	NB 6/15/98

TAIYO YUDEN (U.S.A.) INC.

Control No. 975805A	To: FERMILAB	JTY / KTY Appr.
Last Revision 02	Part no. DO-CAL-PA-V2-D	Drawn By: 10/2/98 R. Blo[illegible]

FERMILAB SUPPLIED PARTS

TAIYO YUDEN SPECIFICATION	REF. NO.	CUSTOMER SPECIFICATION	
See Disclaimer Information	C1	EMK212BJ474KG 160R15W474V4E	Taiyo Yuden JOHANSON
See Disclaimer Information	C2,4,10,12,16, 18,20,22	NMC0805Z5V104M50TRPLPM 08055E104ZATMA	NIC COMPON. AVX Corp.
See Disclaimer Information	C6,11	EMK212BJ154KG NMC0805X7R154K16TRPLPM	Taiyo Yuden NIC COMPON.
See Disclaimer Information	C9,14	NMC0805NPO3R0C50TRPLPM	NIC COMPON.
See Disclaimer Information	C5	NMC0805NPO100J50TRPLPM	NIC COMPON.
See Disclaimer Information	C3	NMC0805NPO5R0C50TRPLPM	NIC COMPON.
See Disclaimer Information	C8,13	USER INSTALLED	
See Disclaimer Information	C15,24	NMC1210NPO103J50TRPLPM	NIC COMPON.
See Disclaimer Information	C17,19,21,23	GMK316F475ZG	Taiyo Yuden
See Disclaimer Information	D1	MMBD7000LT1	Motorola
See Disclaimer Information	Q1,5,6,7,11	MMBTH81LT1	Motorola
See Disclaimer Information	Q2,3,4,8,10,12	MMBTH10LT1	Motorola
See Disclaimer Information	Q9	MMBT3904LT1	Motorola
See Disclaimer Information	Q13	MMBT3906T	Motorola
See Disclaimer Information	J1,2	2SK369-GR	Toshiba
See Disclaimer Information	C25,26,27	TMK107F683Z	Taiyo Yuden
See Disclaimer Information	Connector	ASP-14543-01	Samtec

Rev. 02 Added C1, C2.... C22, C6,C11,C9,C14,C5,C3,C15,C24 PART NUMBERS. RD 6/15/98
By / Date

UTY engineering use only c:\msoffice\winword\975803A1.doc, c:\dwgs\975803a1.dwg, c:\dwgs\965801a.dwg

TAIYO YUDEN (U.S.A.) INC.