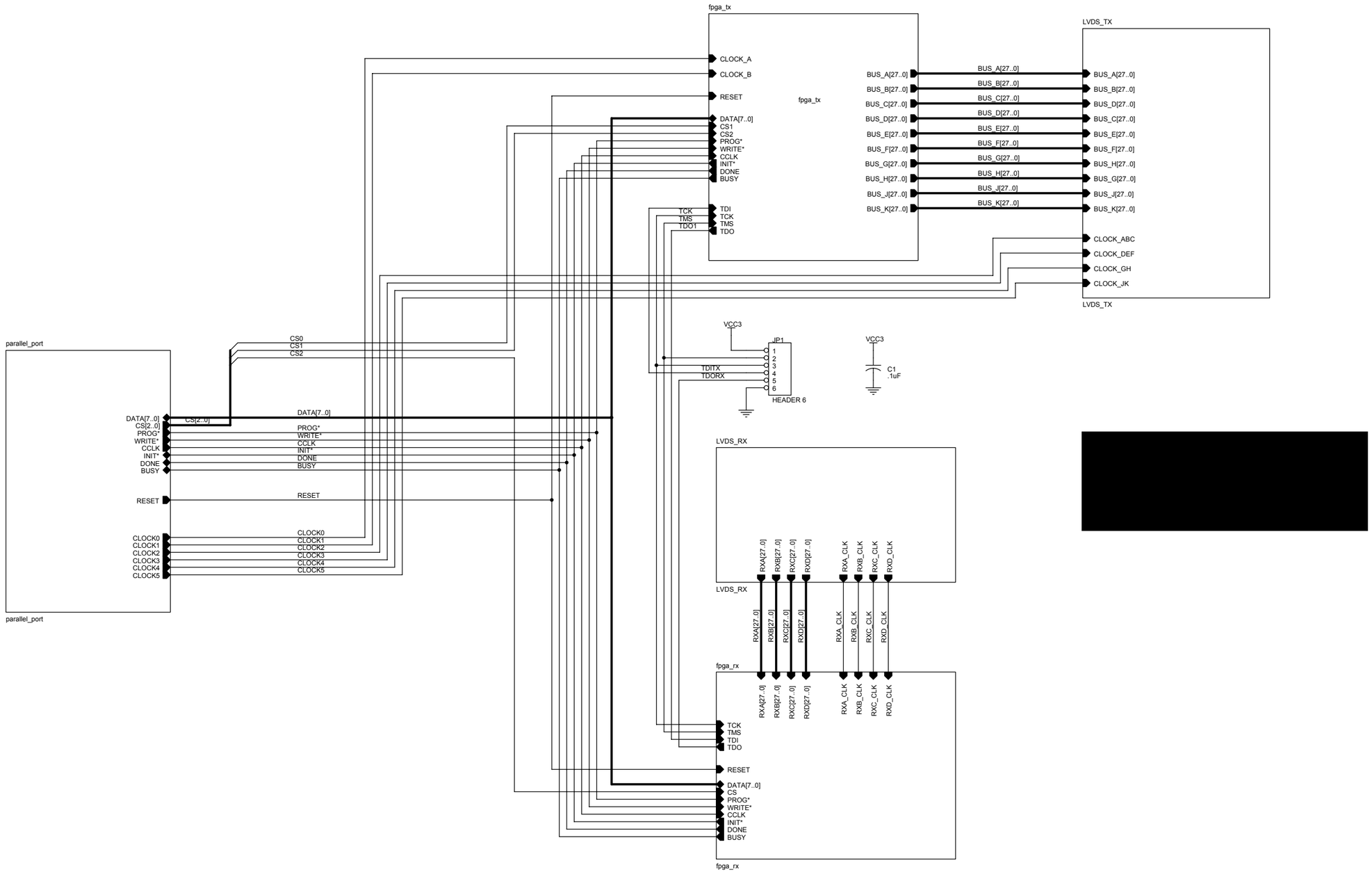

[redacted]

Fermi National Accelerator Laboratory
Particle Physics Division / Engineering & Technical Teams
D-ZERO Upgrade Group
design by Jamieson Olsen <jamieson@fnal.gov>

Title
DATAPUMP: TOP LEVEL

Size	Document Number	Rev
C	<Doc>	A

Date: Monday, November 08, 1999 Sheet 1 of 6

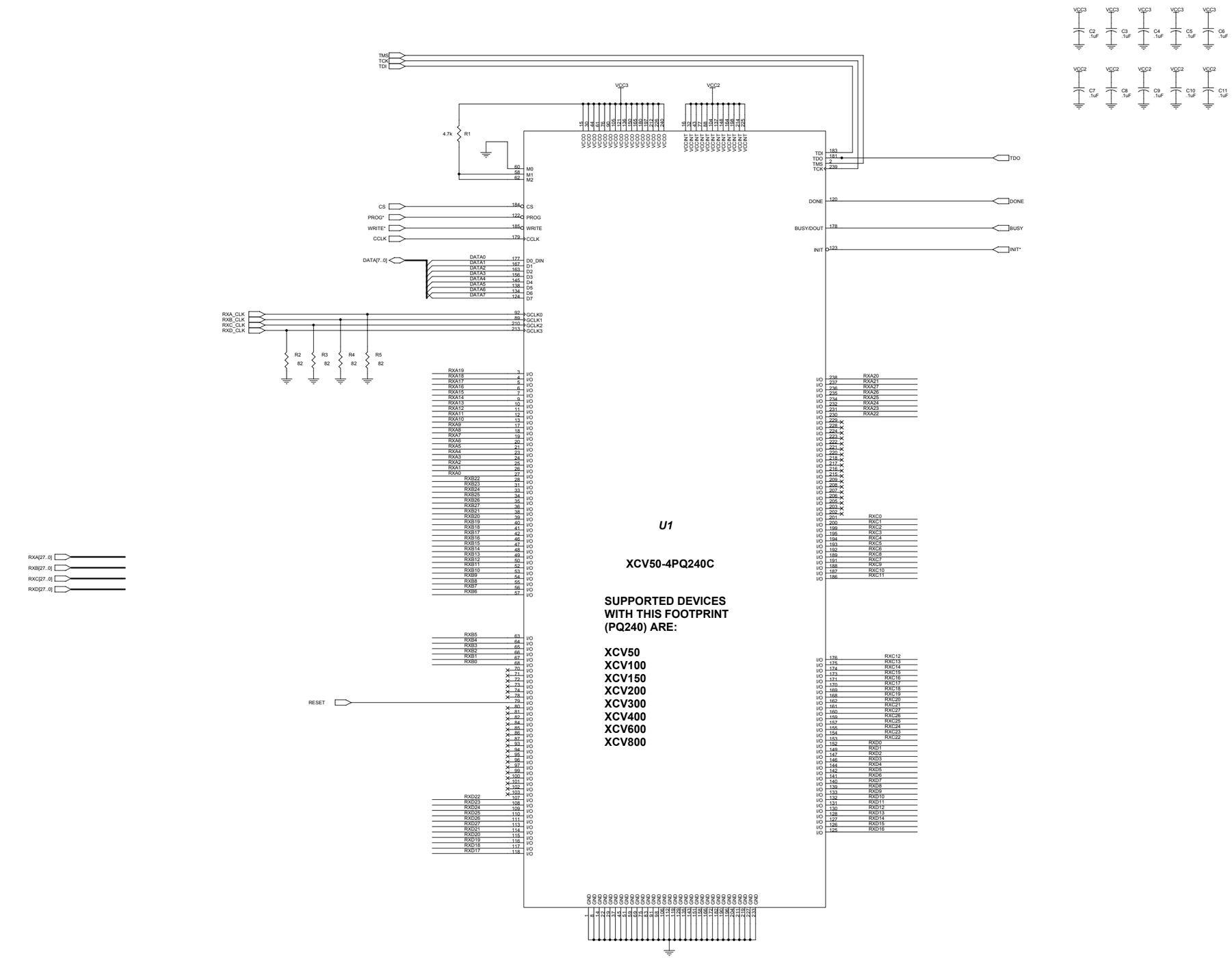

Fermi National Accelerator Laboratory
Particle Physics Division / Engineering & Technical Teams
D-ZERO Upgrade Group
design by Jamieson Olsen <jamieson@fnal.gov>

Title	datapump : fpga rx	
Size D	Document Number <Doc>	Rev a
Date: Monday, November 08, 1999	Sheet 2 of 6	

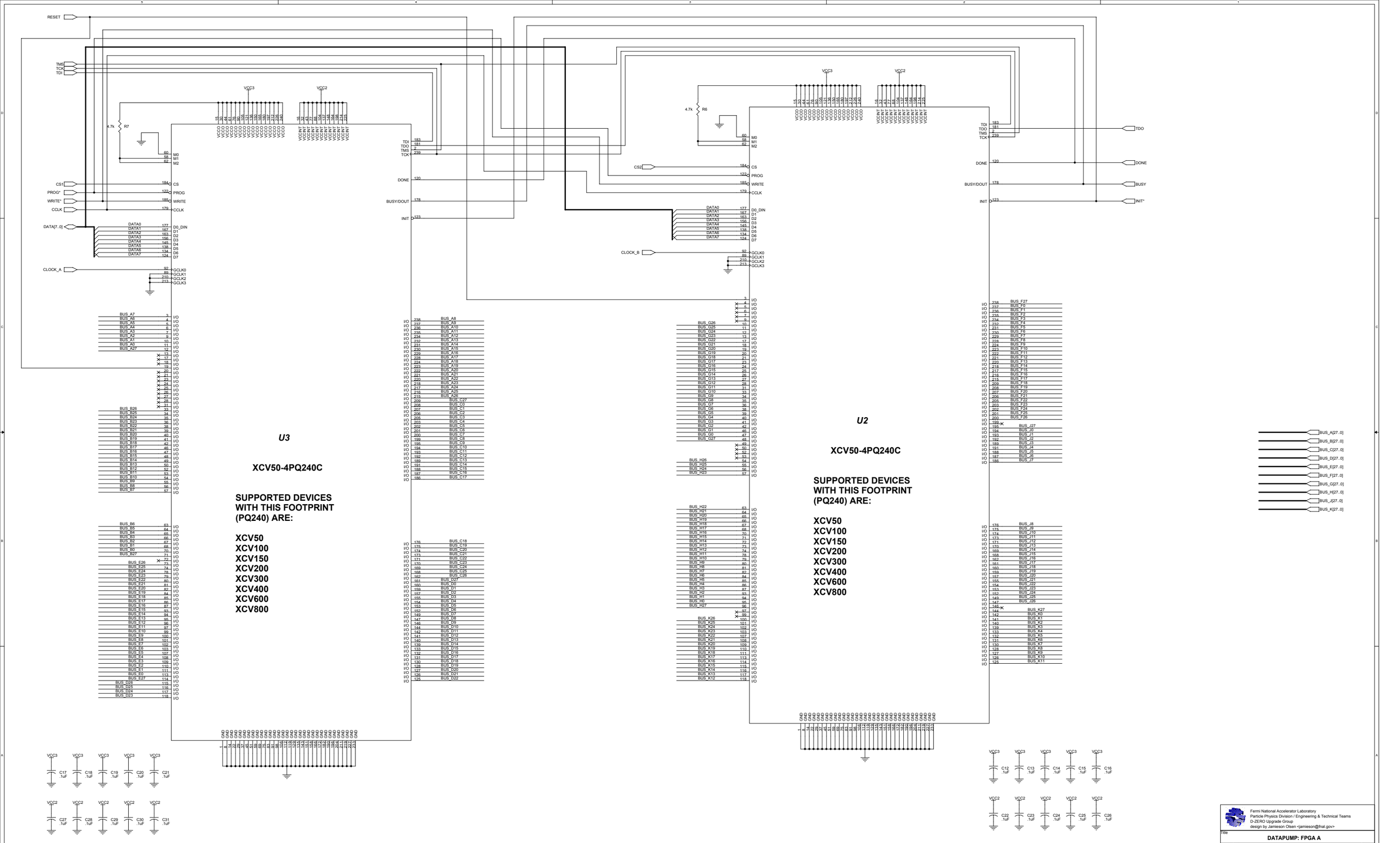

Fermi National Accelerator Laboratory
Particle Physics Division / Engineering & Technical Teams
D-ZERO Upgrade Group
design by Jamieson Olsen <jamieson@fnal.gov>

Title: **DATAPUMP: FPGA A**

Size	Document Number	Rev
D	<Doc>	A

Date: Monday, November 08, 1999 Sheet 3 of 6

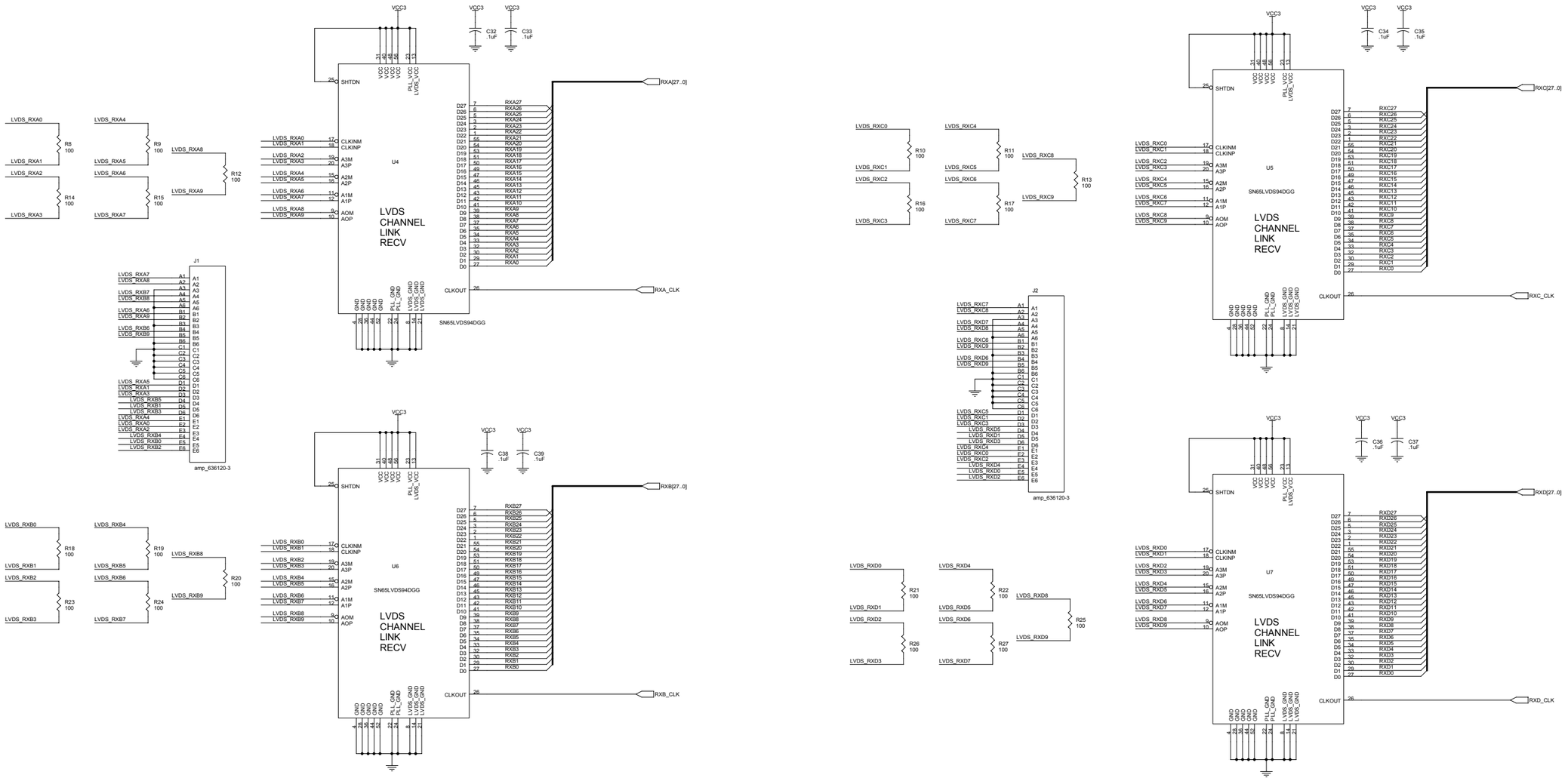

Fermi National Accelerator Laboratory
Particle Physics Division / Engineering & Technical Teams
D-ZERO Upgrade Group
design by Jamieson Olsen <jamieson@fnal.gov>

Title: **DATAPUMP : LVDS RX**

Size	Document Number	Rev
D	<Doc>	a

Date: Monday, November 08, 1999 Sheet 4 of 6

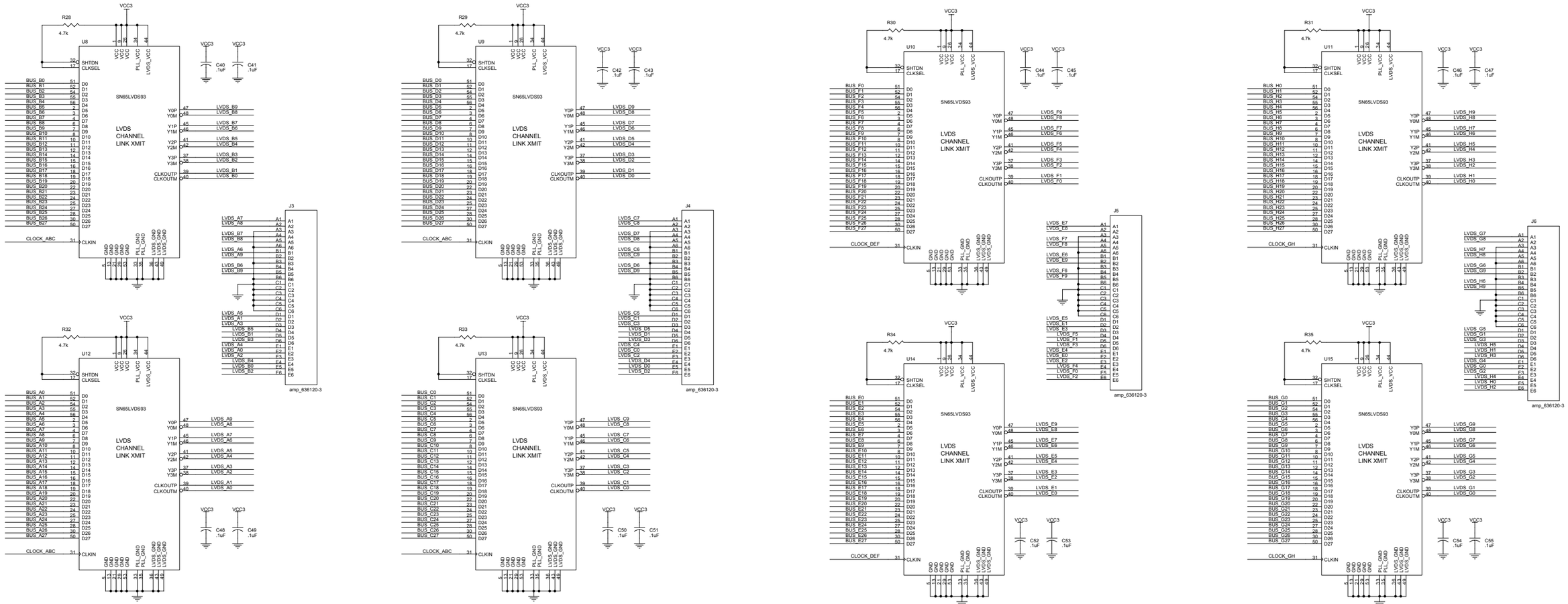

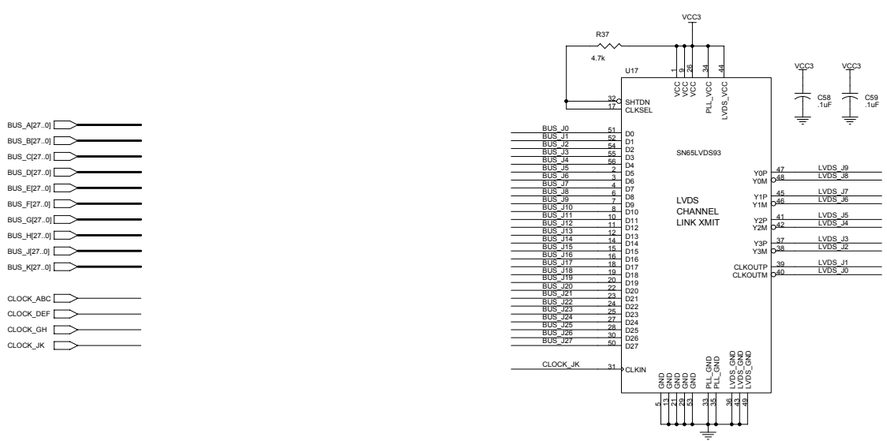

Fermi National Accelerator Laboratory
Particle Physics Division / Engineering & Technical Teams
D-ZERO Upgrade Group
design by Jamieson Olsen <jamieson@fnal.gov>

Title: **DATAPUMP: LVDS TRANSMITTERS**

Size	Document Number	Rev
D	<Doc>	a

Date: Monday, November 08, 1999 Sheet 5 of 6

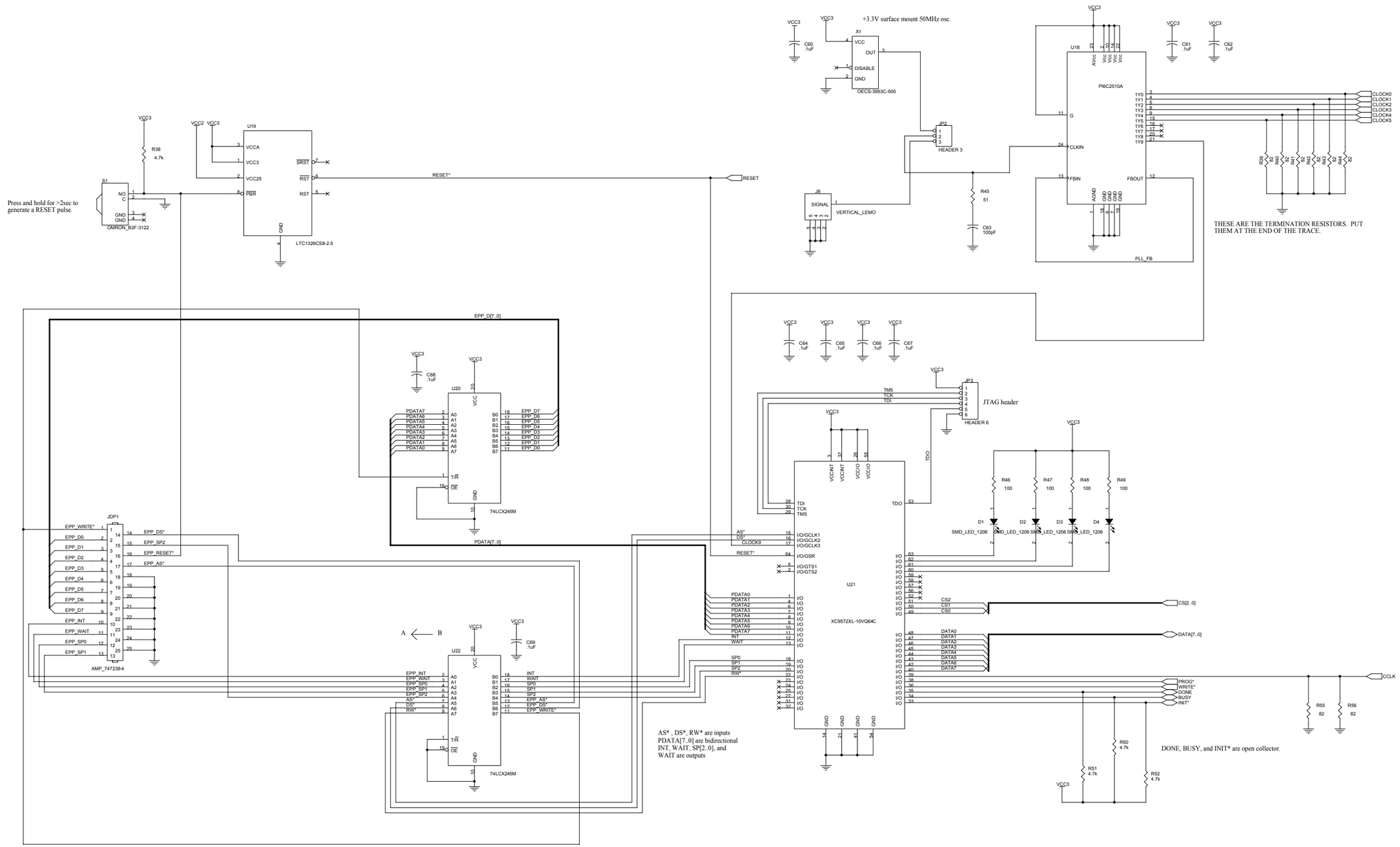

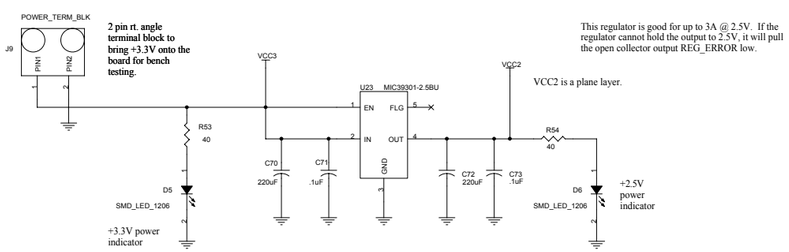

Fermi National Accelerator Laboratory
Particle Physics Division / Engineering & Technical Teams
D-ZERO Upgrade Group
design by Jamieson Olsen <jamieson@fnal.gov>

Title: **Parallel Port (EPP mode) Interface**

Size	Document Number	Rev
D	<Doc>	a

Date: Monday, November 08, 1999 Sheet 6 of 6