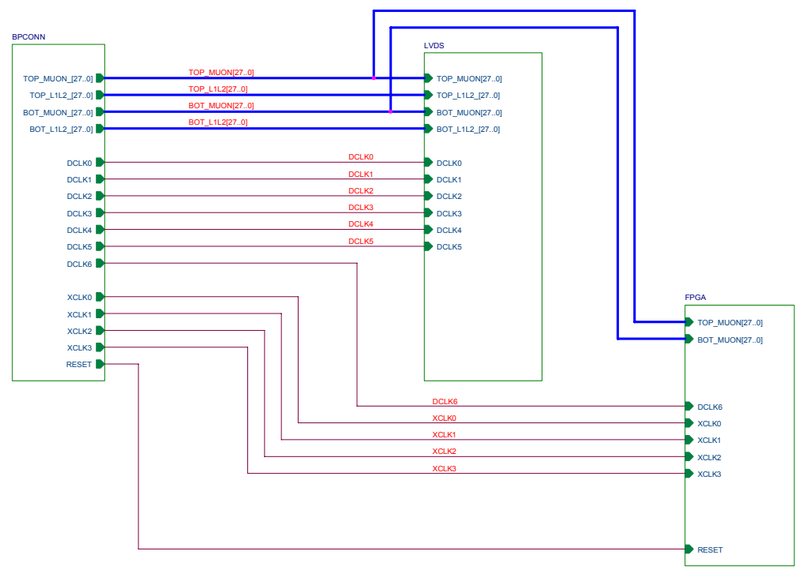

Fermi National Accelerator Laboratory
PPD / E&TT / DZERO upgrade

design by:	J. Olsen / P. Sheahan
drawn by:	J. Olsen / P. Sheahan
drawing number	3823-113-ED-330390
name of board	**DFE Transition Board**

size	page name	revision
B	**top level**	B

Date: Wednesday, August 21, 2002 Sheet 1 of 4

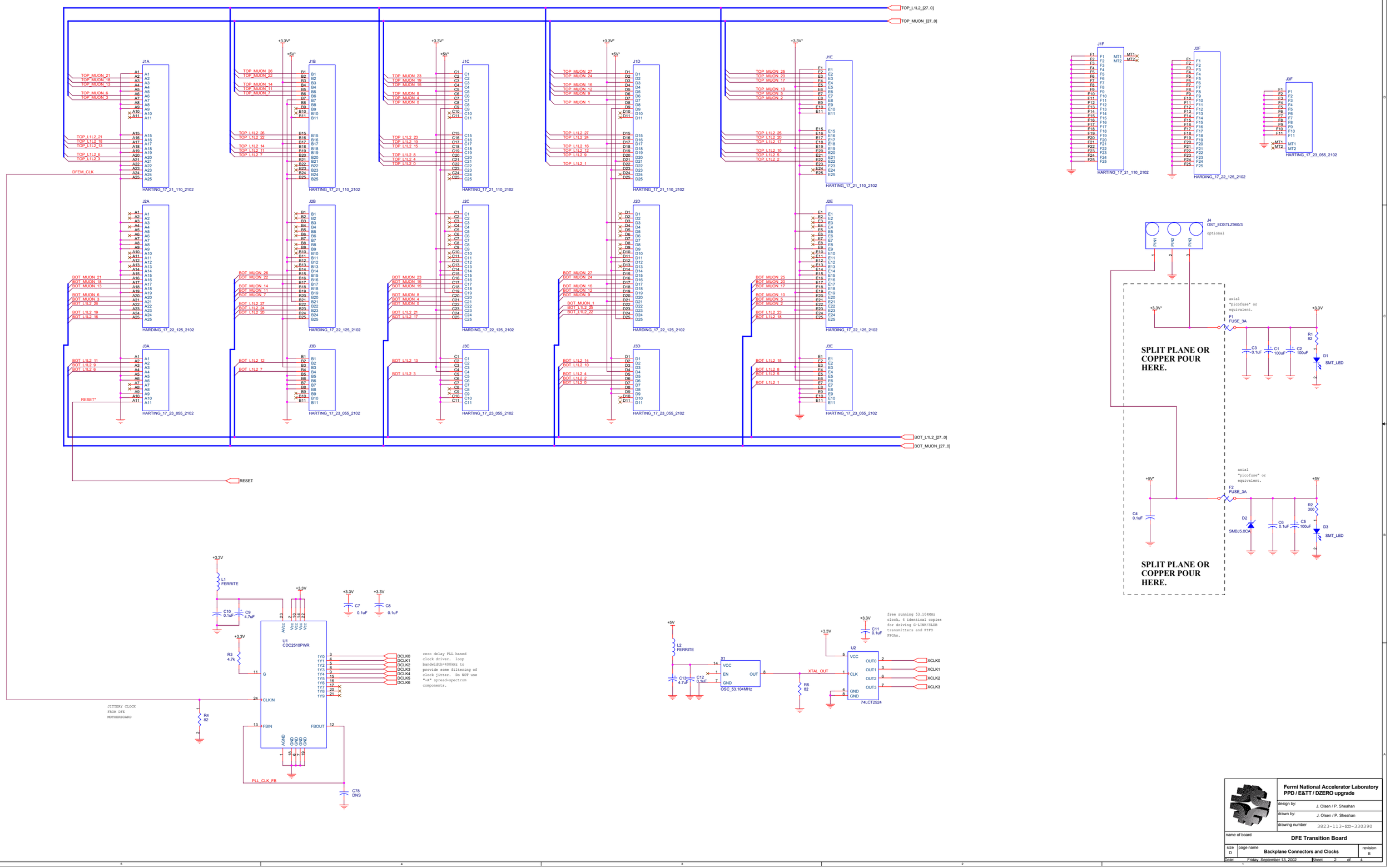

Fermi National Accelerator Laboratory PPD / E&TT / DZERO upgrade	
design by:	J. Olsen / P. Sheahan
drawn by:	J. Olsen / P. Sheahan
drawing number	3823-113-ED-330390
name of board	DFE Transition Board
size D	page name Backplane Connectors and Clocks
revision B	
Date: Friday, September 13, 2002	Sheet 2 of 4

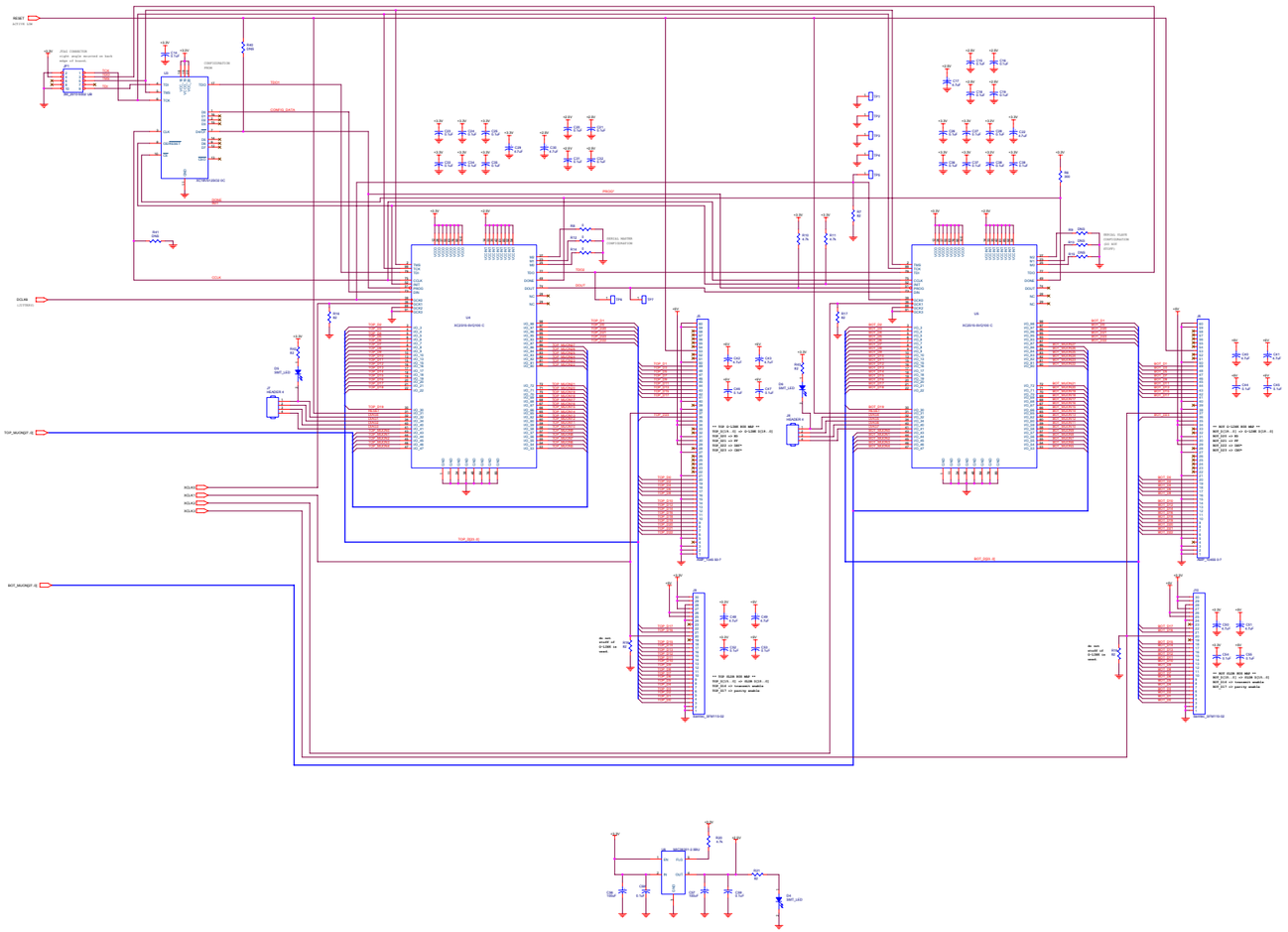

Fermi National Accelerator Laboratory PPD / E&TT / DZERO upgrade		
design by:	J. Olsen / P. Sheahan	
drawn by:	J. Olsen / P. Sheahan	
drawing number	3823-113-ED-330390	
name of board	DFE Transition Board	
size D	page name DESKEW PLDs	revision B
Date: Wednesday, September 11, 2002	Sheet 3 of 4	

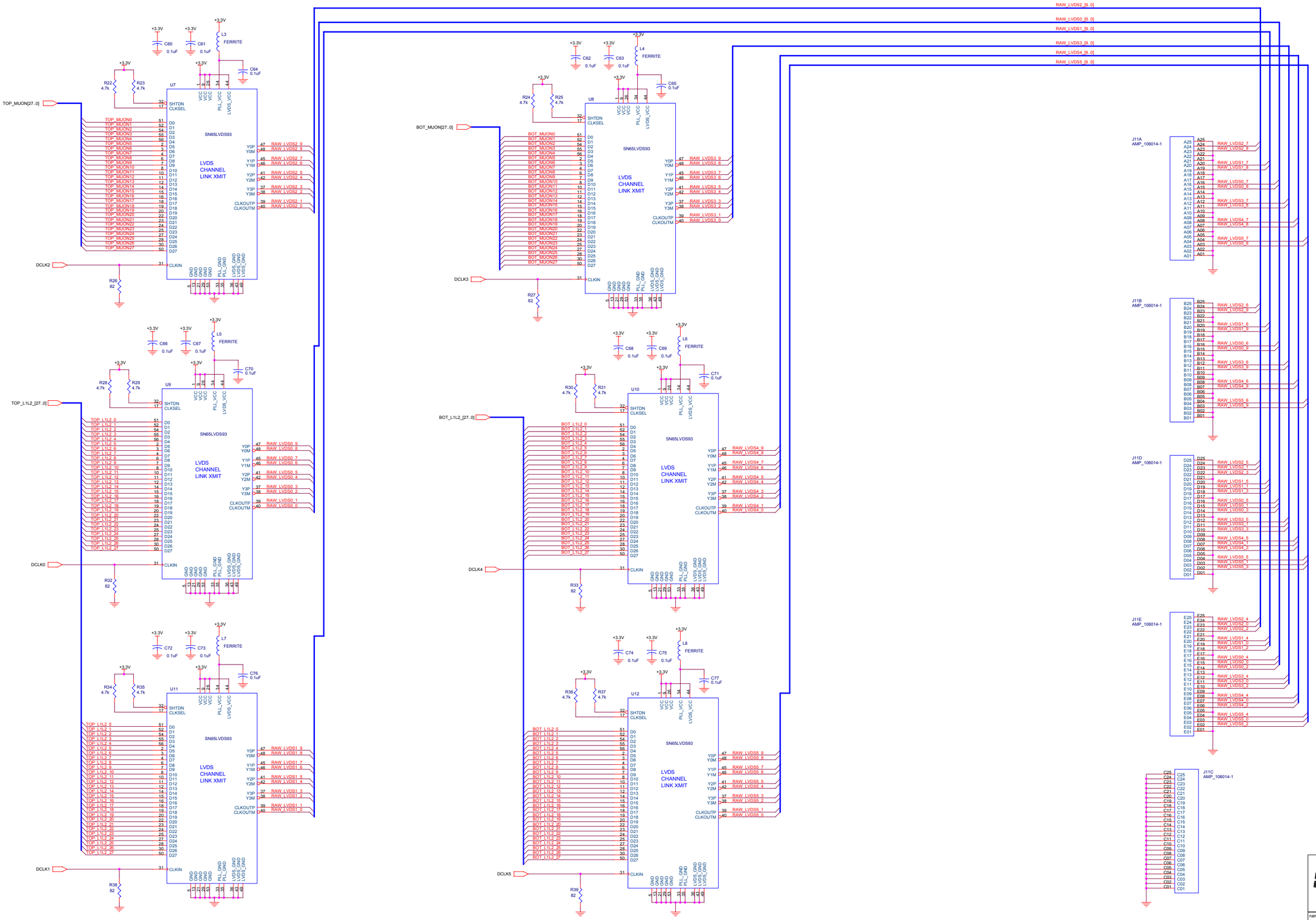
U7
U8
U9
U10
U11
U12
SN65LVDS93
LVDS CHANNEL LINK XMIT
TOP_MUON[27..0]
BOT_MUON[27..0]
TOP_L1L2_[27..0]
BOT_L1L2_[27..0]
DCLK0
DCLK1
DCLK2
DCLK3
DCLK4
DCLK5
RAW_LVDS0_[9..0]
RAW_LVDS1_[9..0]
RAW_LVDS2_[9..0]
RAW_LVDS3_[9..0]
RAW_LVDS4_[9..0]
RAW_LVDS5_[9..0]
J11A AMP_106014-1
J11B AMP_106014-1
J11C AMP_106014-1
J11D AMP_106014-1
J11E AMP_106014-1
Fermi National Accelerator Laboratory
PPD / E&TT / DZERO upgrade
design by: J. Olsen / P. Sheahan
drawn by: J. Olsen / P. Sheahan
drawing number 3823-113-ED-330390
name of board DFE Transition Board
size D
page name LVDS Transmitters
revision B
Date: Wednesday, August 21, 2002
Sheet 4 of 4