REV	DESCRIPTION	DRAWN	DATE
		APPROVED	DATE

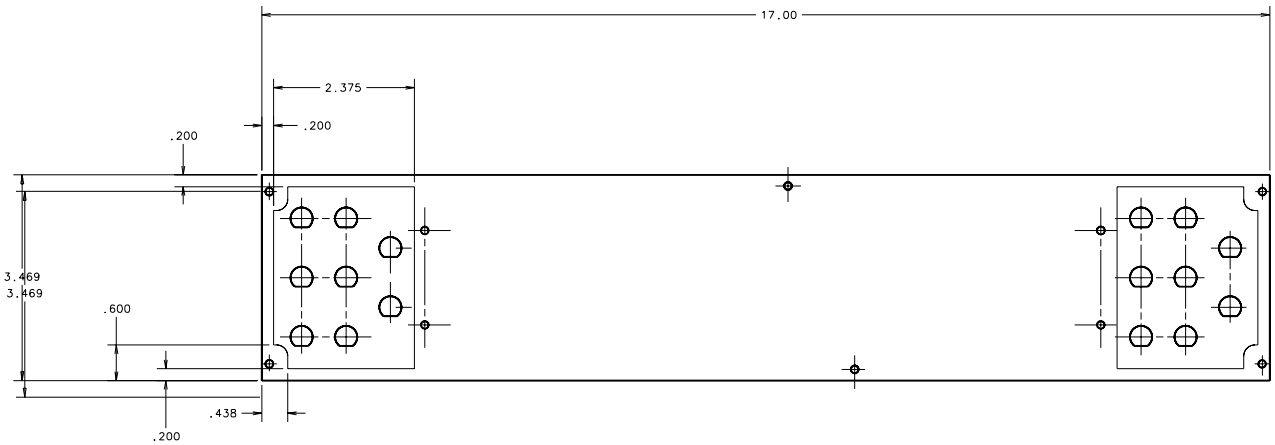

UNLESS OTHERWISE SPECIFIED					
.XX	.XXX	ANGLES	ORIGINATOR	J.FOGLESONG	19-JUN-1999
±	±	± 1°	DRAWN	N.CADENA	17-JUN-1999
			CHECKED	C.NILA	07-MAR-2001
			APPROVED	J.FOGLESONG	07-MAR-2001

1. BREAK ALL SHARP EDGES .015 MAX.
2. DO NOT SCALE DRAWING.
3. DIMENSIONS BASED UPON ANSI Y14.5M-1982
4. MAX. ALL MACH. SURFACES 125

USED ON: 372679

MATERIAL: 1/8" THK G-10 COPPER CLAD ONE SIDE

FERMI NATIONAL ACCELERATOR LABORATORY
UNITED STATES DEPARTMENT OF ENERGY

PPD/MECHANICAL DEPARTMENT
DZERO ADJUSTABLE VOLTAGE FANOUT
REAR PANEL-GROUND PLANE

SCALE	DRAWING NUMBER	SHEET	REV
FULL	3823.133-MD-373575	1 OF 2	

CREATED WITH : Ideas8m4 GROUP: PPD/MECHANICAL DEPARTMENT

Plotted by cadena on 16-Dec-02 , File: adj_rearpanel_gnd_plane.pff