Online Systems Tutorial

15-Nov-2005

S. Fuess

Tutorial contents

- A mixture of Design and Operations
  - Design:
    - Emphasizing the network view

      I'll concentrate on this, with the intention that one can operate the system better if they understand its function
  - Operations
    - Monitoring
    - Alarms
    - Hints and tricks

      This is more disorganized, and there are clearly many more topics that could be addressed. Perhaps need a future talk.
- First, not to overwhelm you, but as a framework for the tutorial, the "everything in one slide" slide…

DØ Online System: Network View

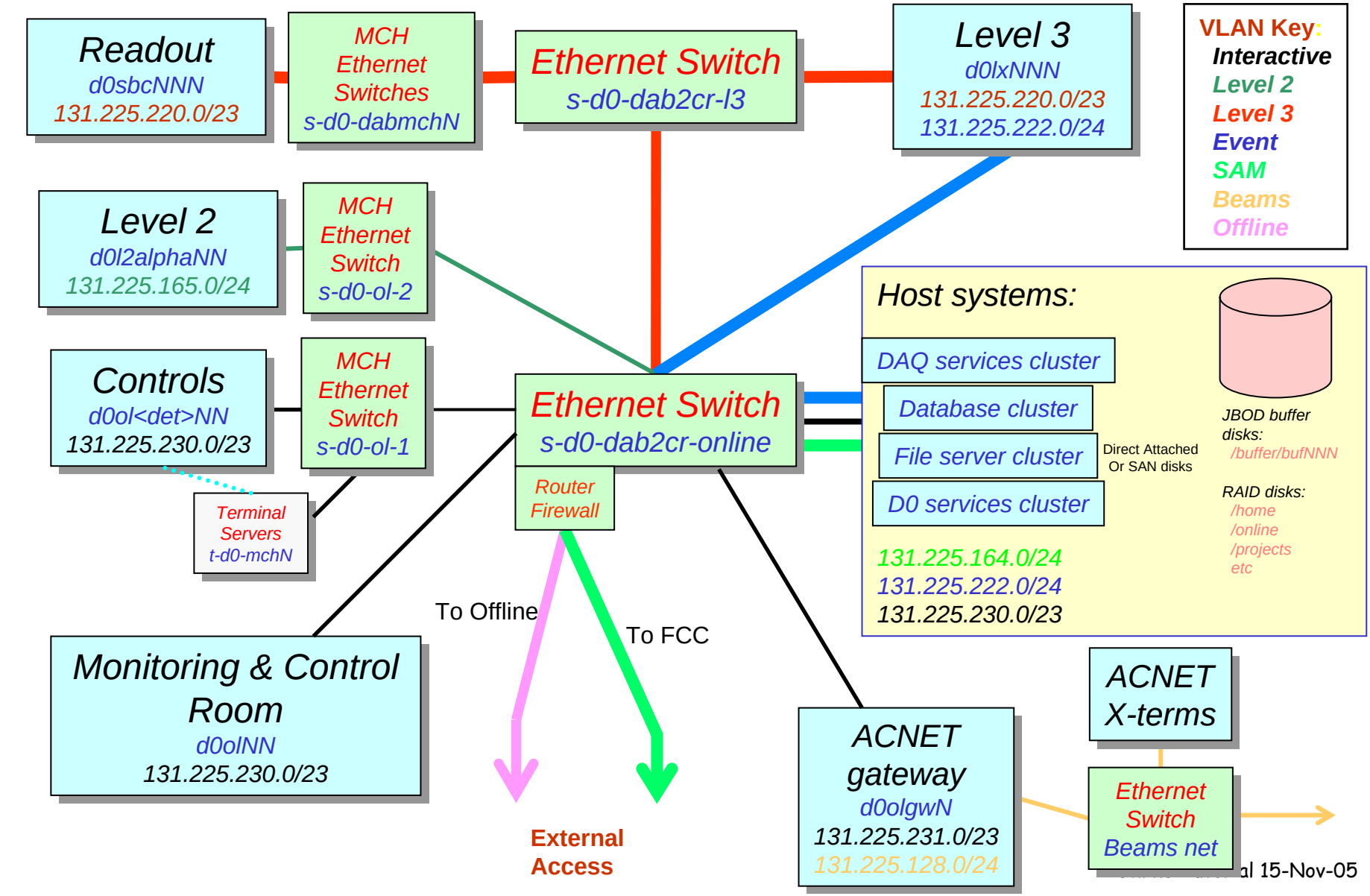

Network devices

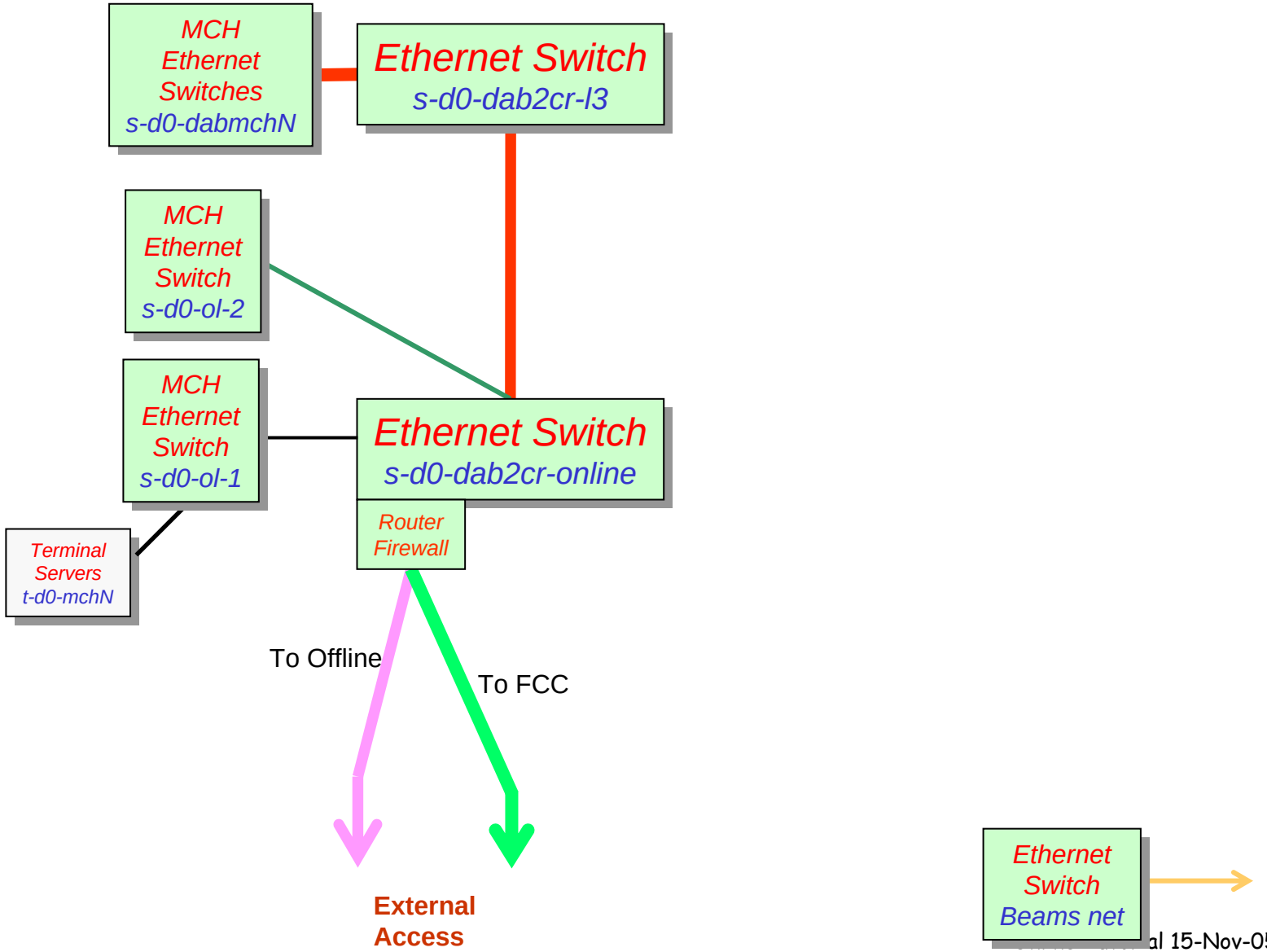

Network devices

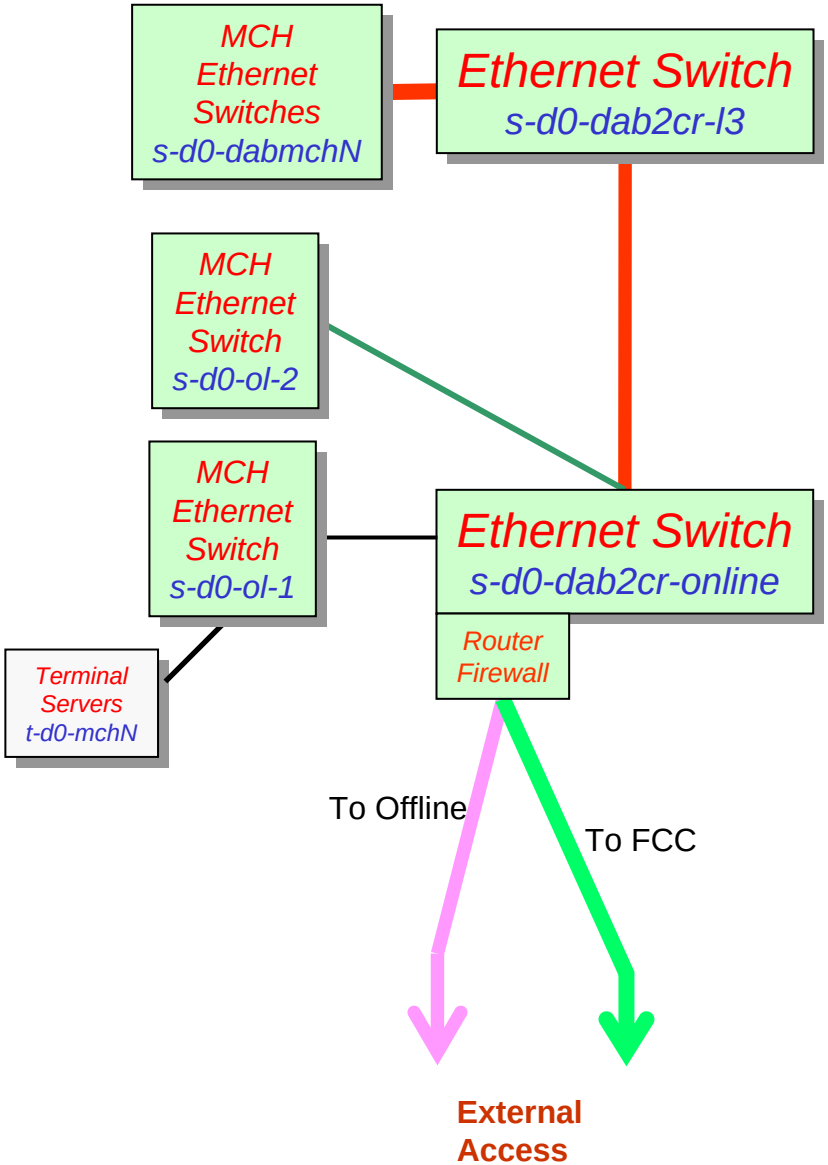

There are two large Cisco 6509 switches:

- "DAQ" switch for SBC to L3 traffic

- "Online" switch, with router, for remainder

Satellite switches in MCH for Controls, L2, L3

Point of presence switch for Beams net

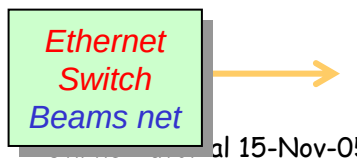

Host systems

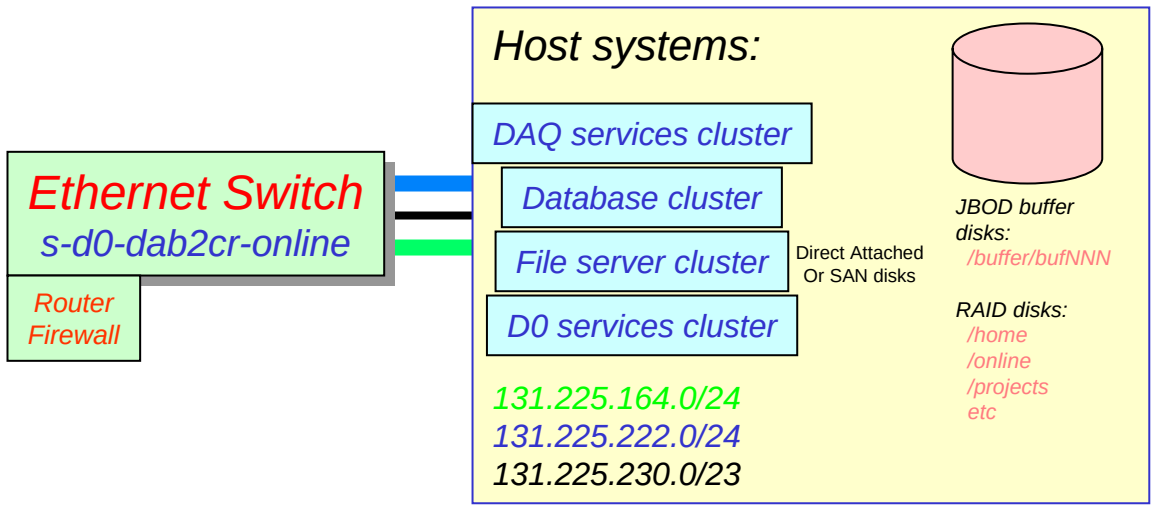

Host systems

These are the "big machines" for the Online, where the need is greatest for:

- *performance*
- *network connectivity*
- *storage*
- *reliability*
- *redundancy*

Play a role in almost all functions

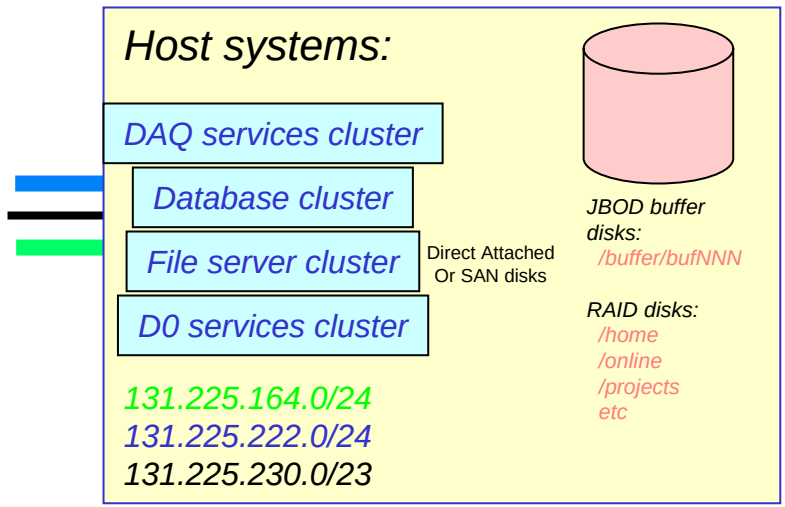

A digression to look at the Host nodes follows…

Host Systems

- The philosophy (unfortunately sometimes violated) of the Online computing system is to have several classes of nodes:
  - Front ends (SBCs, IOCs)
    - A few hardware varieties, but otherwise interchangeable
  - Level 3 nodes
    - Interchangeable, except for…
    - L3 Supervisor node (d0lxmast) has special functions
      - (but this is changing in the next months… more later)
  - Control room nodes
    - Interchangeable, but require hardware configuration
      - For multiple monitors
  - Monitoring (Examine) nodes
    - Interchangeable
- One class of nodes, the “Host Systems”, is also meant to be composed of interchangeable parts
  - But significantly more critical functions are run there…

Host Systems

- Critical functions:
  - “Back end” of DAQ (Data Logger, SAM transfers)
    - More demanding network and I/O capabilities
    - Including Luminosity “data logger”
  - ORACLE database
  - File servers
  - Essential applications:
    - SES (Alarm) applications
    - Internal Web server (not quite yet…)
    - Slow controls archiver
    - E-log mysql database

- These functions are supported by a set of high-availability “clusters”
  - Using RedHat cluster software
  - Provide for automatic failover of cluster services

Cluster Configuration

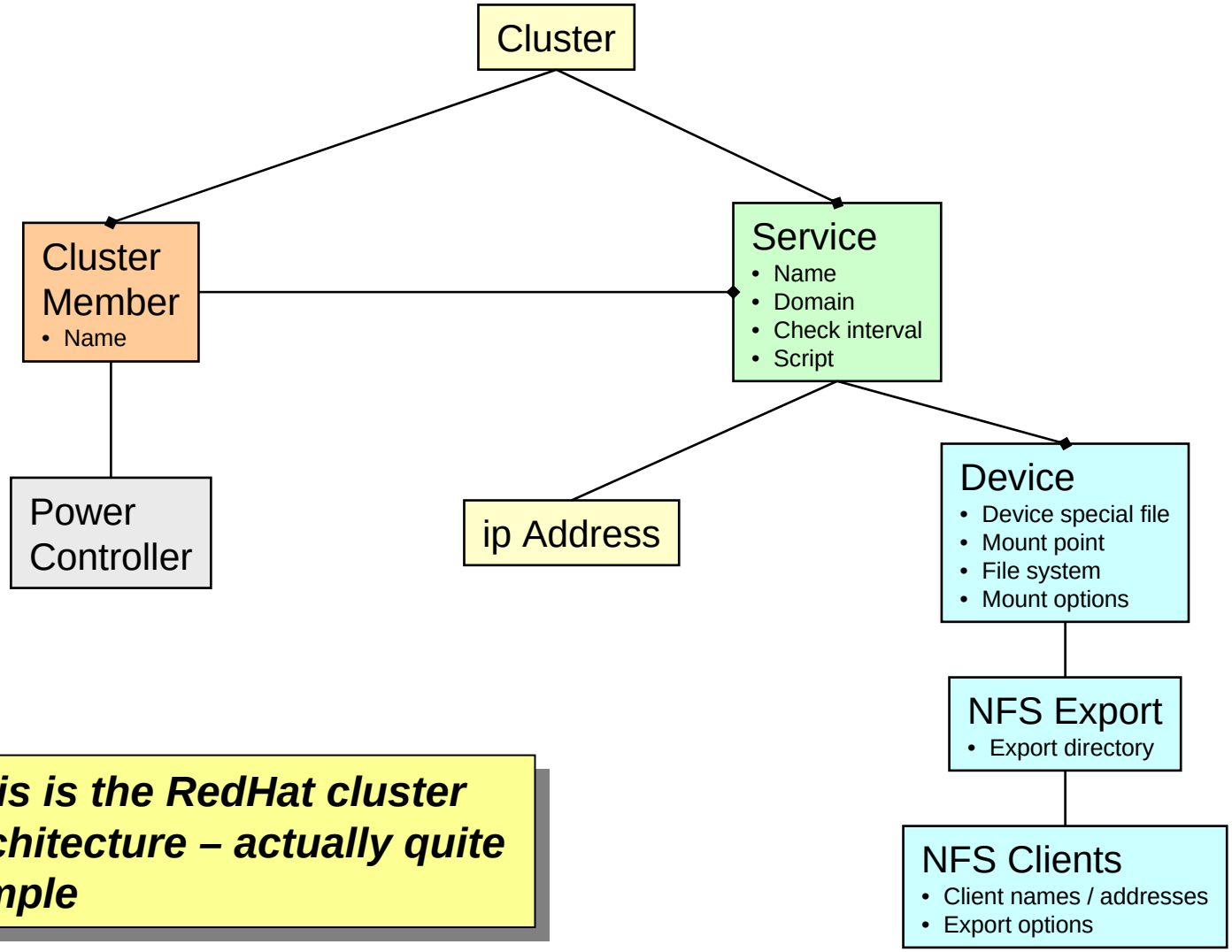

This is the RedHat cluster architecture – actually quite simple

Cluster services

Cluster	Members	Services (= ip name)
NFS (Blue)	d0old d0olr d0ole (d0ols) d0olo d0olp	d0ol-nfs-1 d0ol-nfs-2 d0ol-nfs-3 d0ol-boot
DAQ (Yellow)	d0olf (d0olw) d0oll (d0olx) (d0olq)	d0ol-daq-1 (and d0ol-daq-1b) d0ol-daq-2 (and d0ol-daq-2b) d0ol-lum
Oracle (Green)	d0olg d0olu d0olh (d0olv) d0oli d0olt	d0ol-db-prd d0ol-db-dev d0ol-db-mon d0ol-dbs
Services (Orange)	d0olj d0olk d0oln	d0ol-svc-1 d0ol-svc-2 d0ol-svc-3 d0ol-svc-archive d0ol-svc-ses d0ol-svc-www d0ol-svc-yp
L3 Supervisor (Aqua) (not yet in service)	d0oly d0olz	d0ol-sup d0ol-mon

Cluster storage

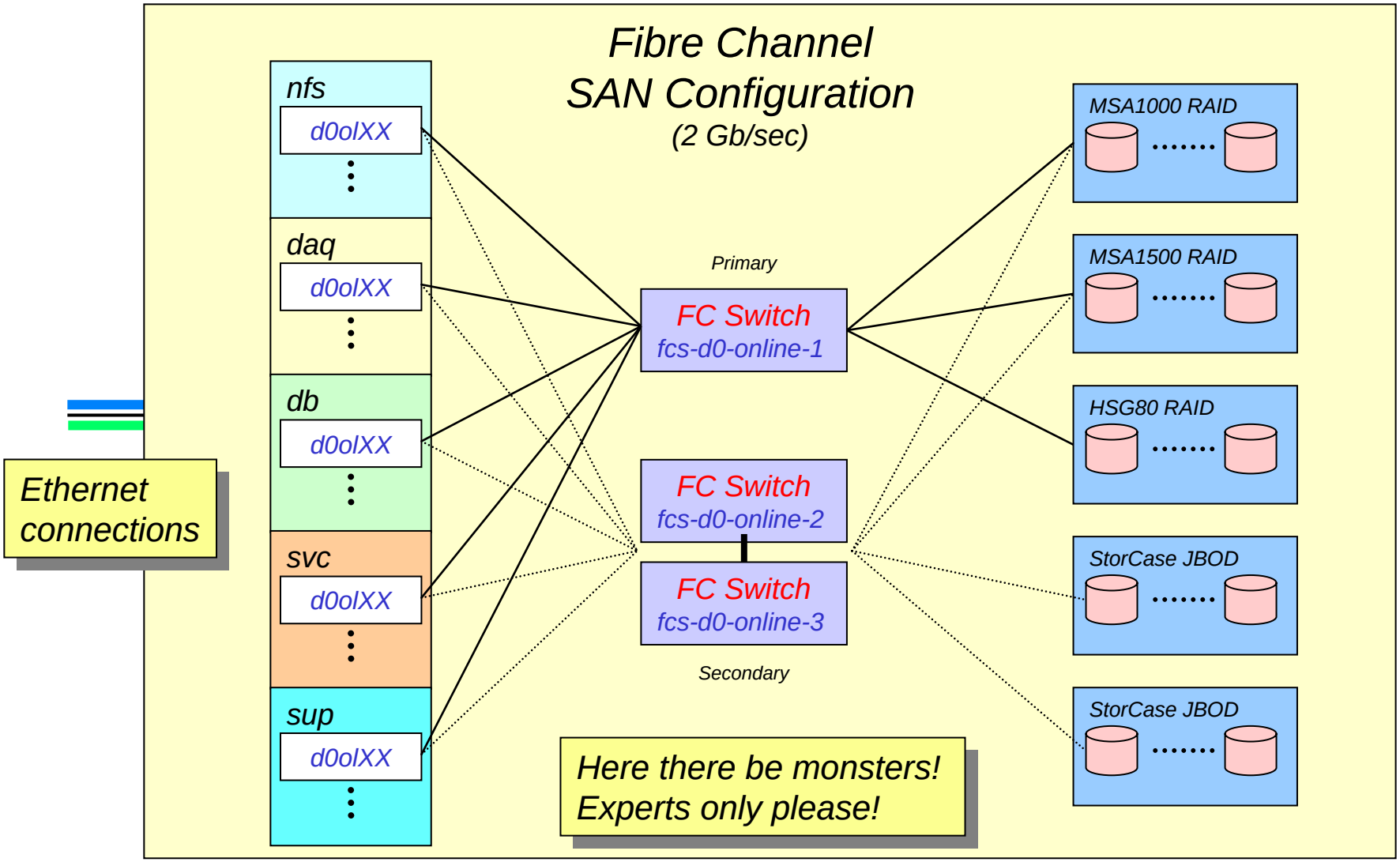

More on clusters…

- A service has associated disks
  - Locally mounted for efficiency
  - Local mount point is different than NFS mount point
    - e.g. The nfs-1 server mounts /export/online, which is mounted on clients at /online
- A service has an associated script for start/stop
  - It's appropriate to start/stop applications from that script *only* if the application is stateless (has no memory of activity)
    - Other applications, e.g. Data Logger, that run on a cluster member associated with a service need to be started/stopped independently
    - Advantage to association with service is locality of disk (e.g. /buffer disk for DL)
- Cluster service has it's own ip name/address that moves between cluster members as the service is relocated
  - The service name should be used in d0online_names.py
  - (Sometimes) you can ssh to the service name
    - e.g. d0ssh d0ol-svc-archive
    - Requires:
      - Kerberos host principal for service
      - sshd configured to bind to service ip address

Back to the full view…

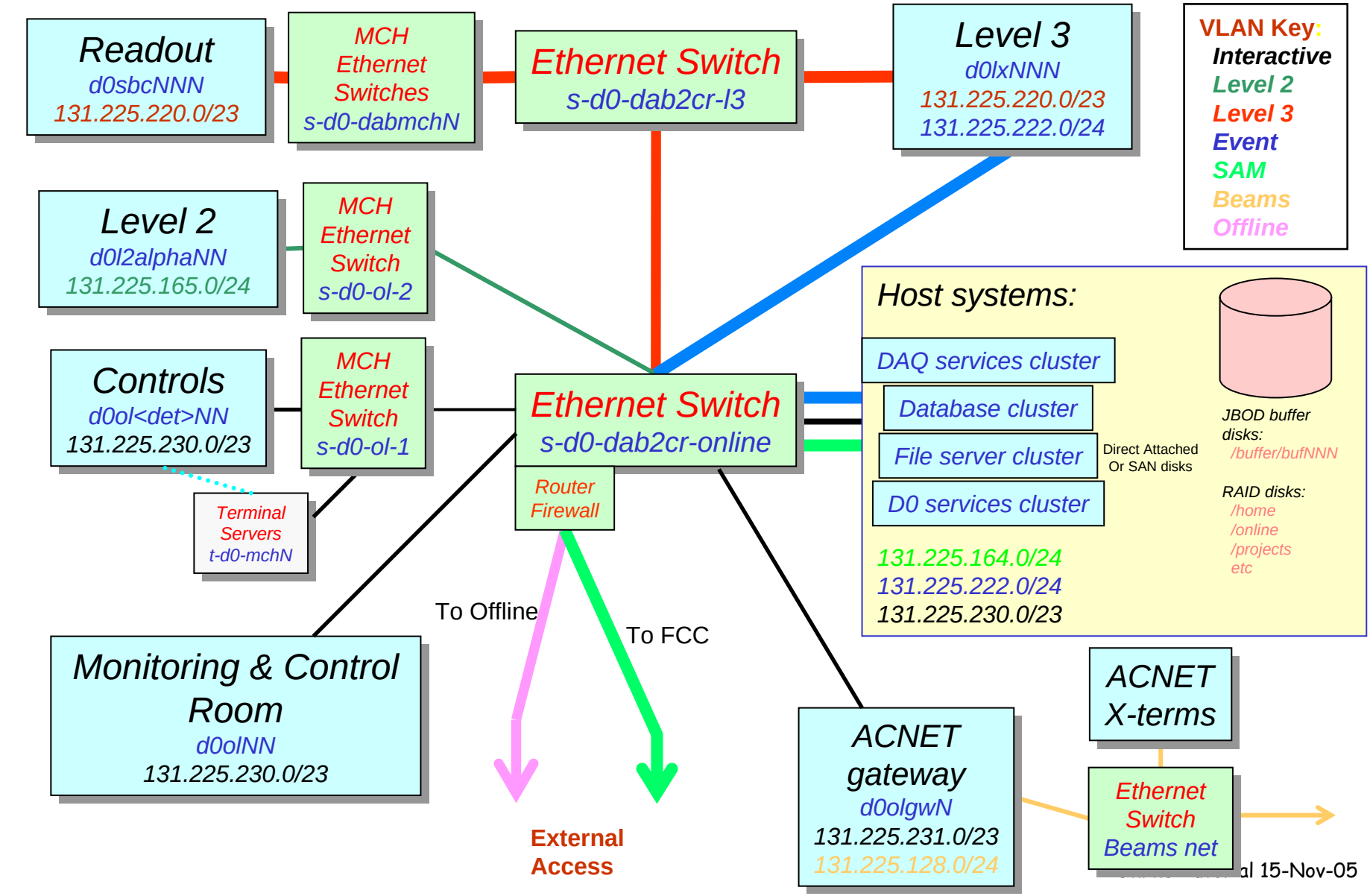

Slow Controls and ACNET

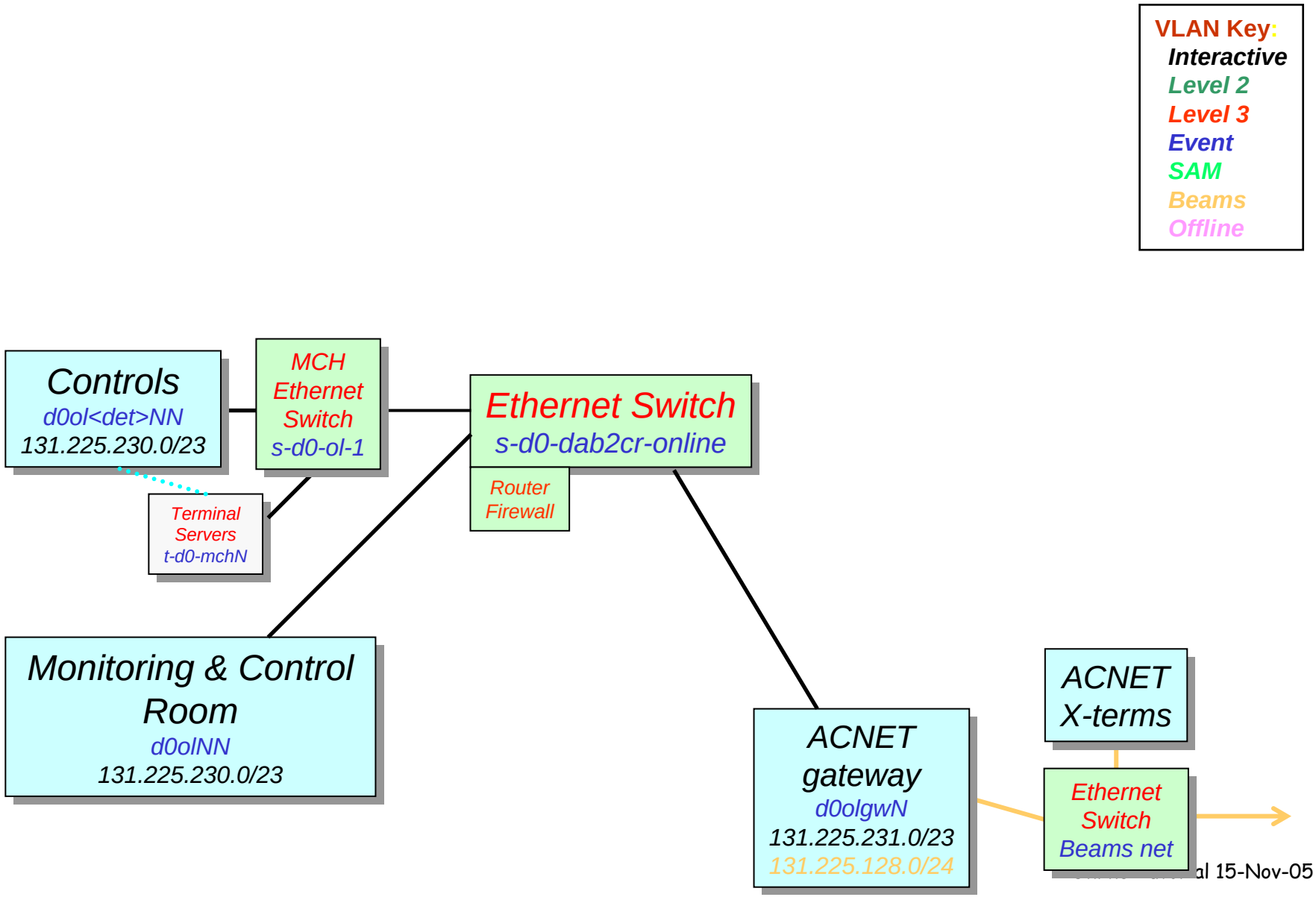

Slow Controls and ACNET

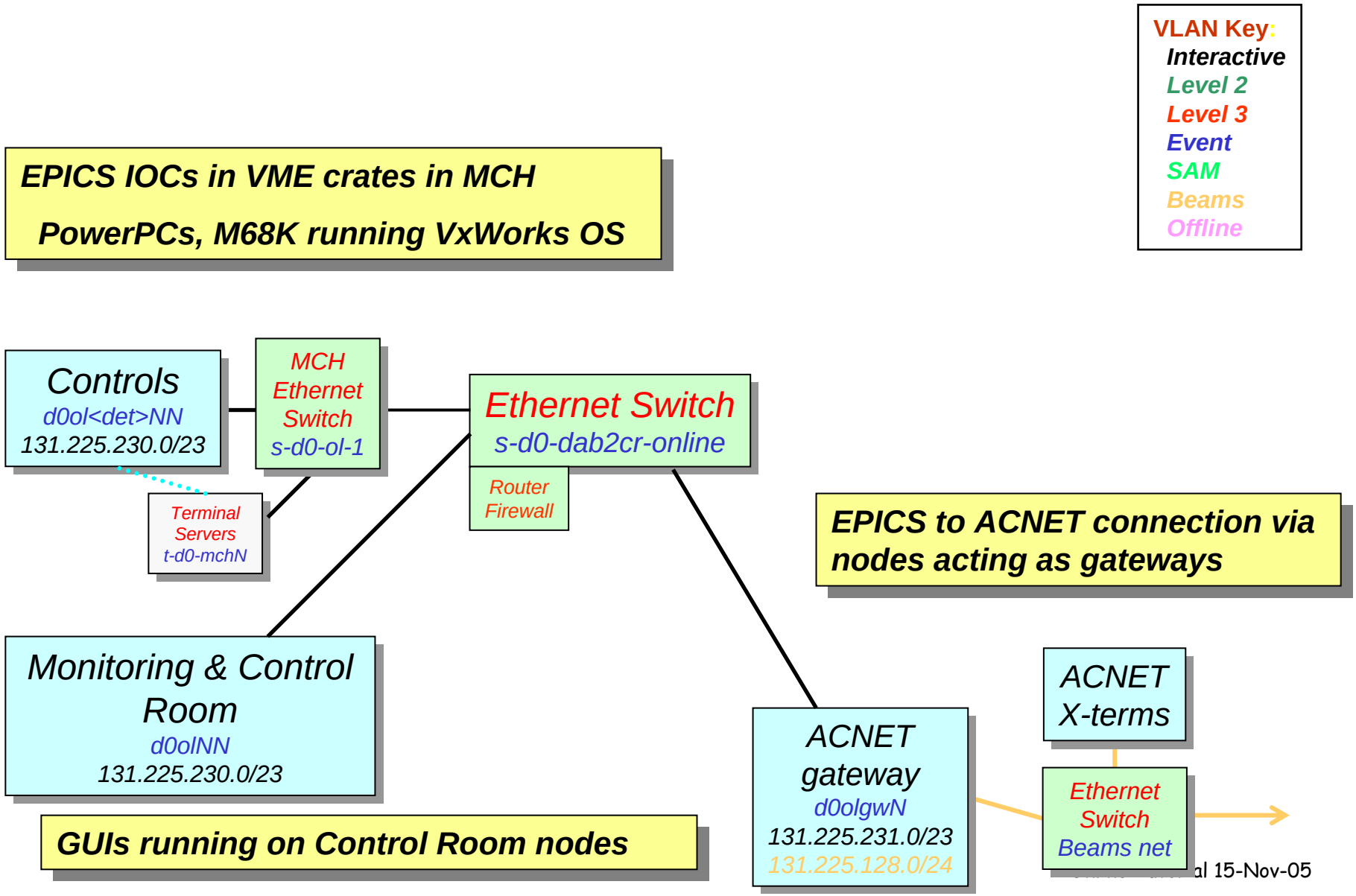

Level 2

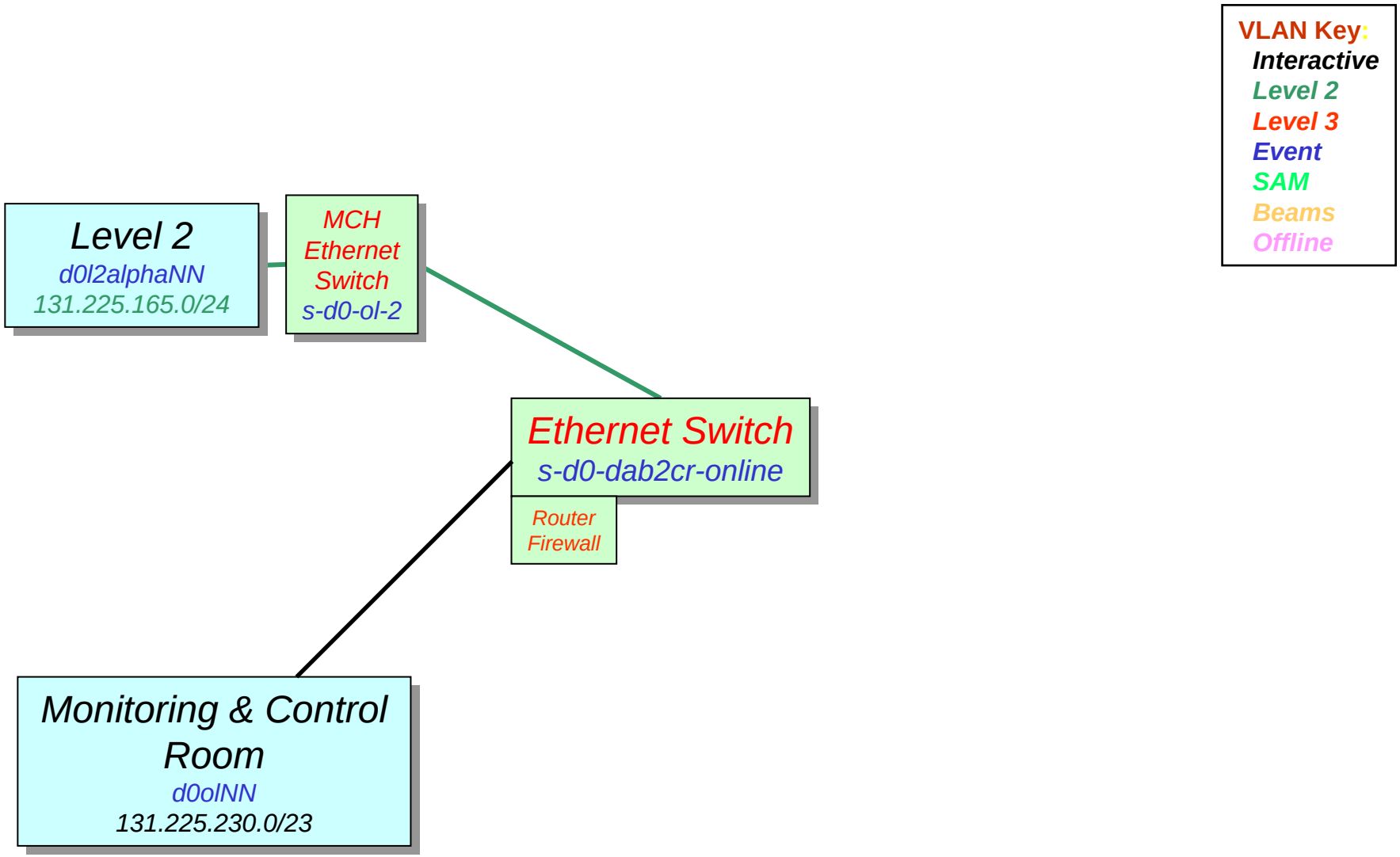
VLAN Key:
Interactive
Level 2
Level 3
Event
SAM
Beams
Offline
Level 2
d0l2alphaNN
131.225.165.0/24
MCH
Ethernet
Switch
s-d0-ol-2
Ethernet Switch
s-d0-dab2cr-online
Router
Firewall
Monitoring & Control
Room
d0olNN
131.225.230.0/23

Level 2

L2 Alphas, Betas in MCH

Connection for configuration and monitoring, <u>not</u> event data path

VLAN Key:
- ***Interactive***
- ***Level 2***
- ***Level 3***
- ***Event***
- ***SAM***
- ***Beams***
- ***Offline***

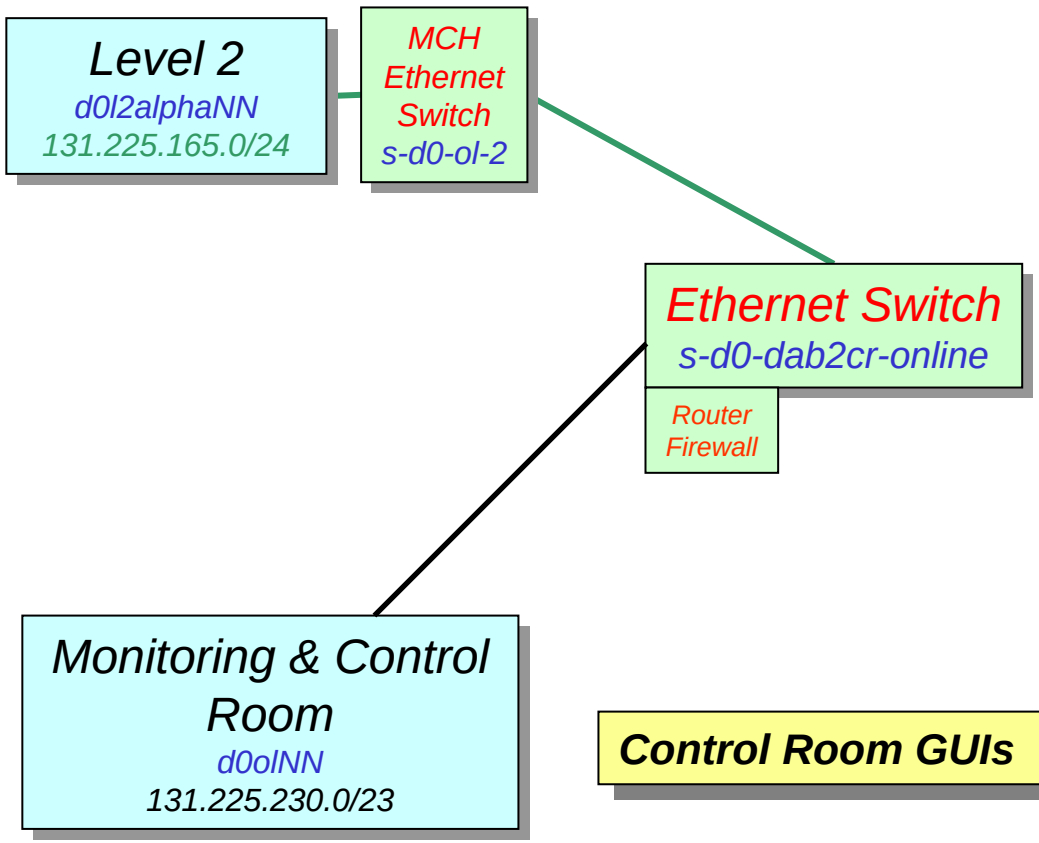

Control Room GUIs

Event Data Path (PDAQ)

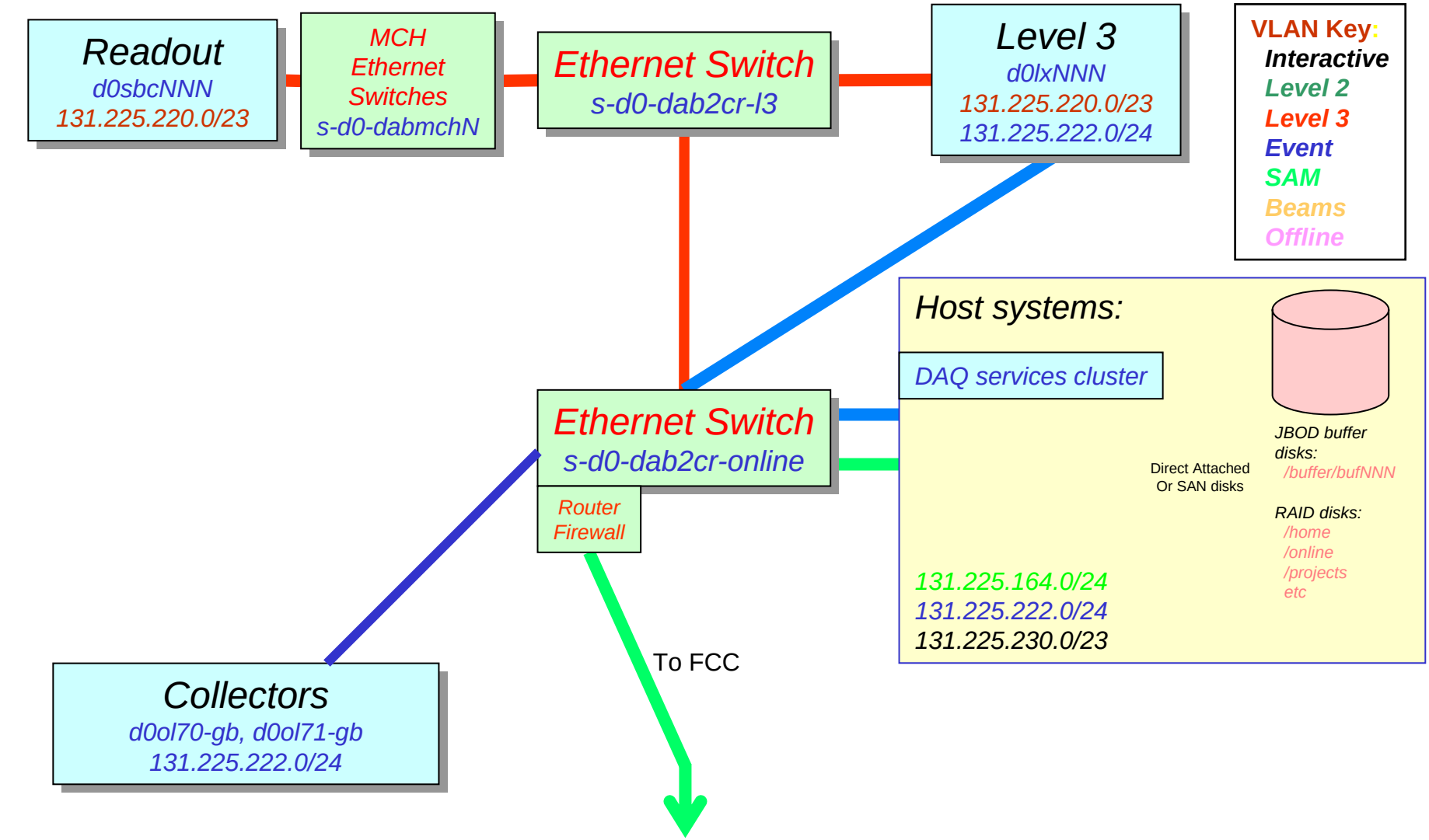

Event Data Path (PDAQ)

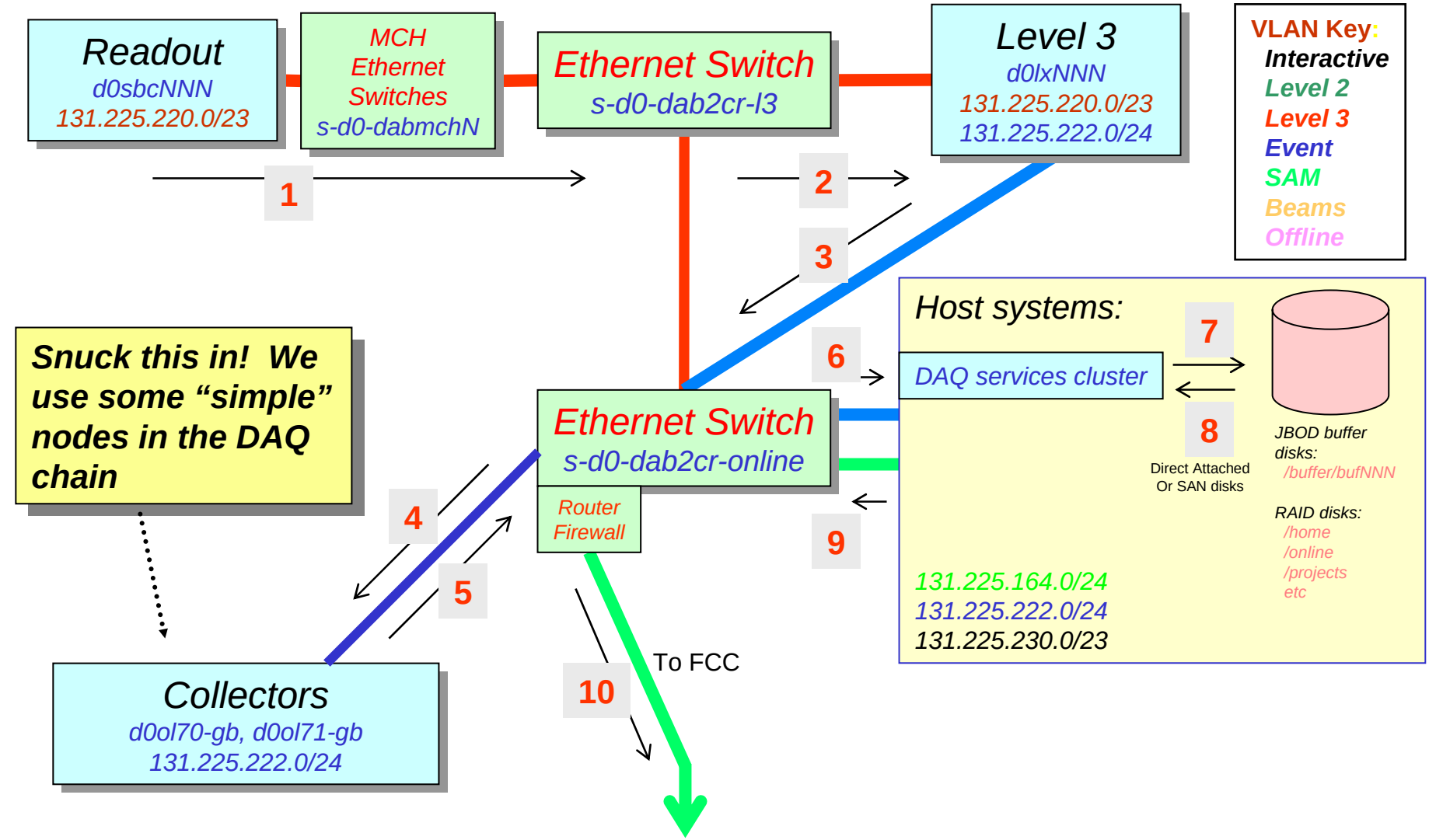

PDAQ Event Data Flow

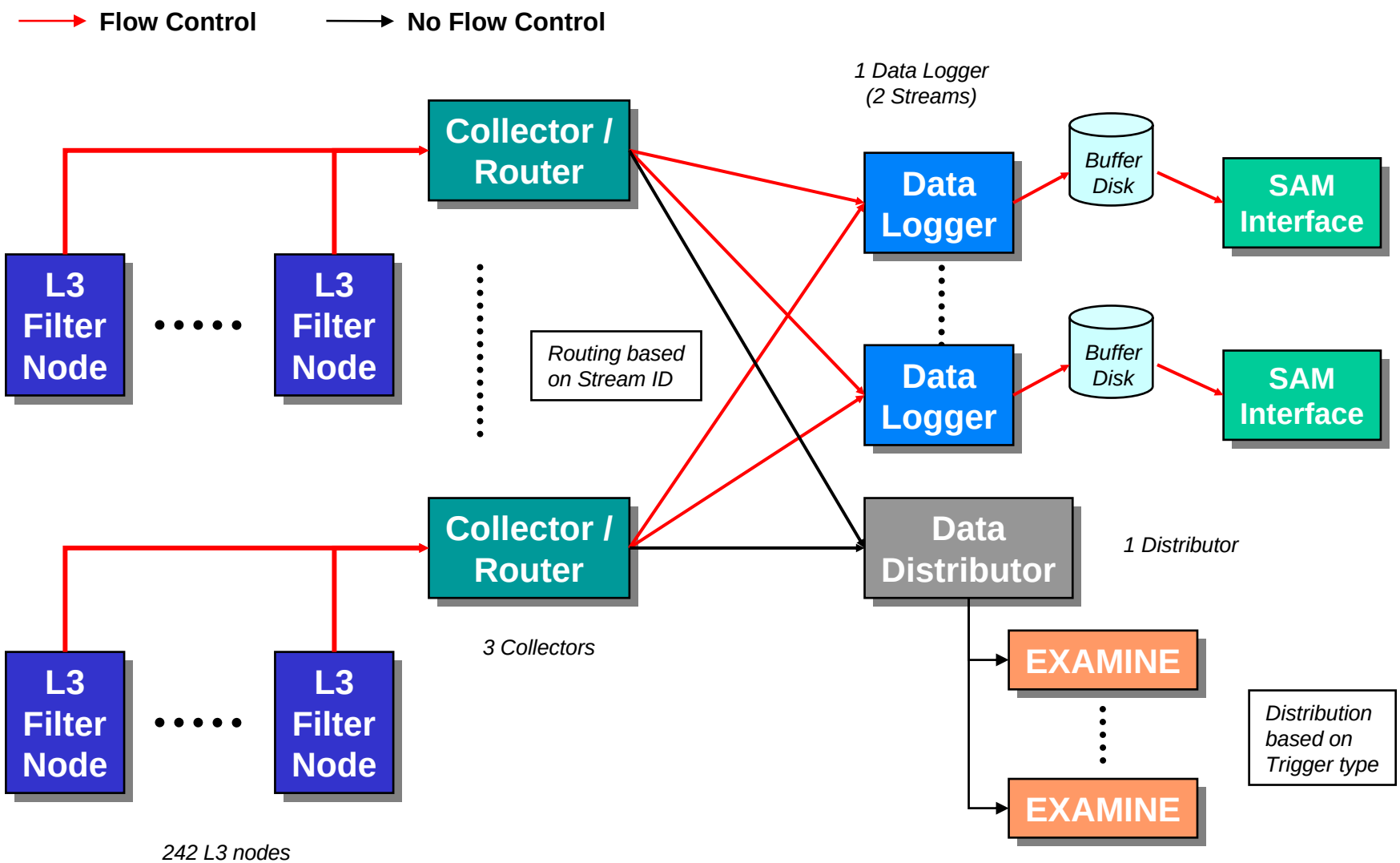

Luminosity DAQ

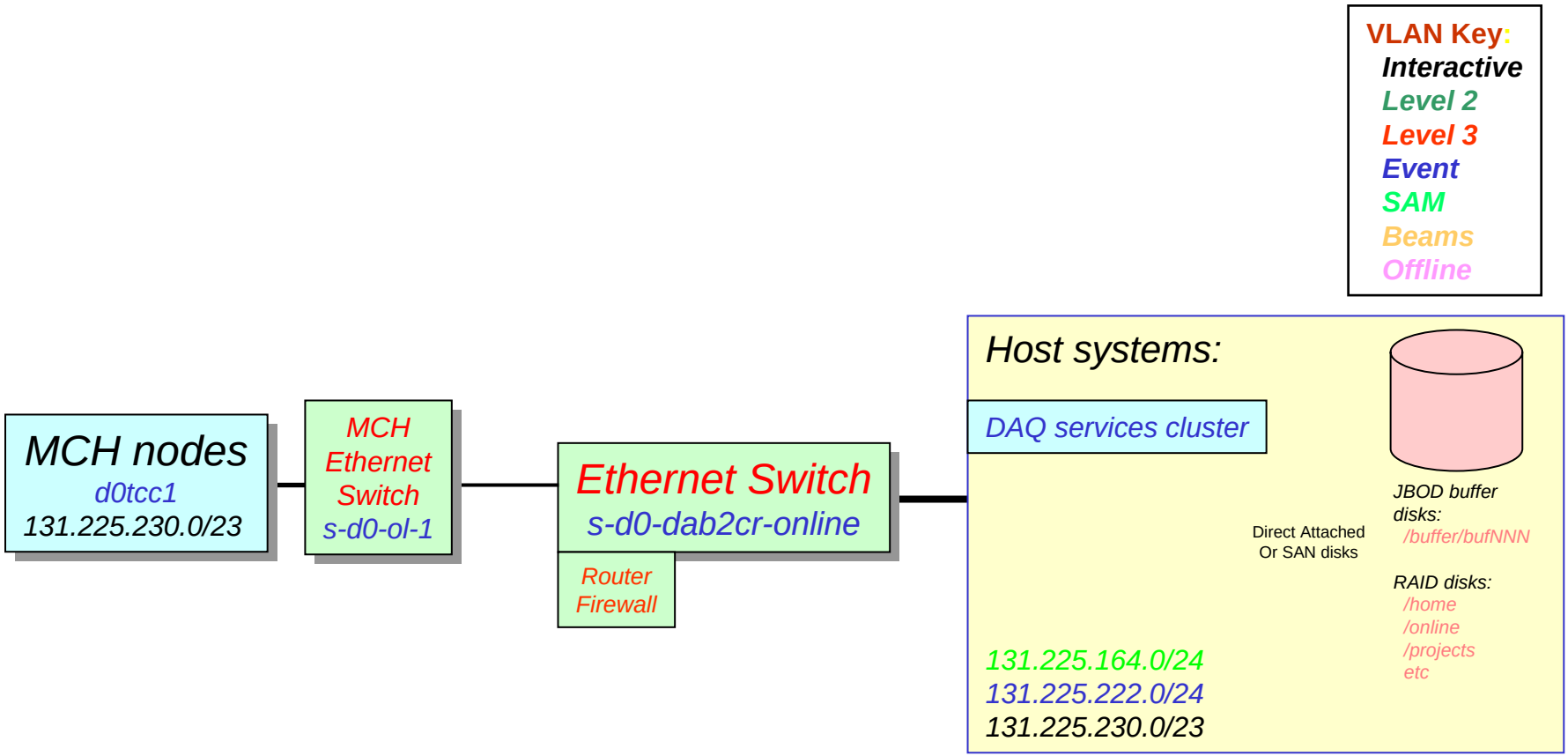

Luminosity DAQ

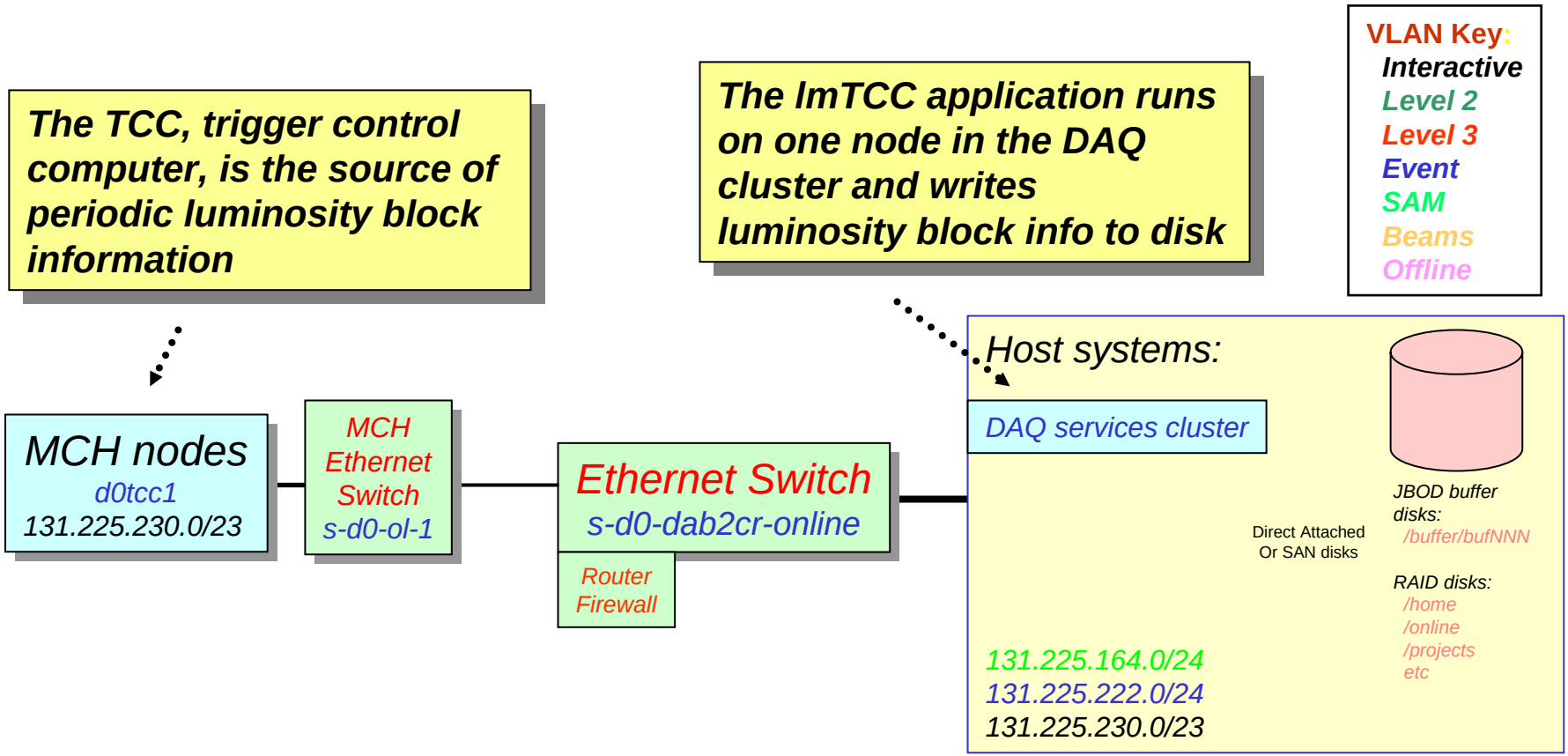

Event Data Path (SDAQ)

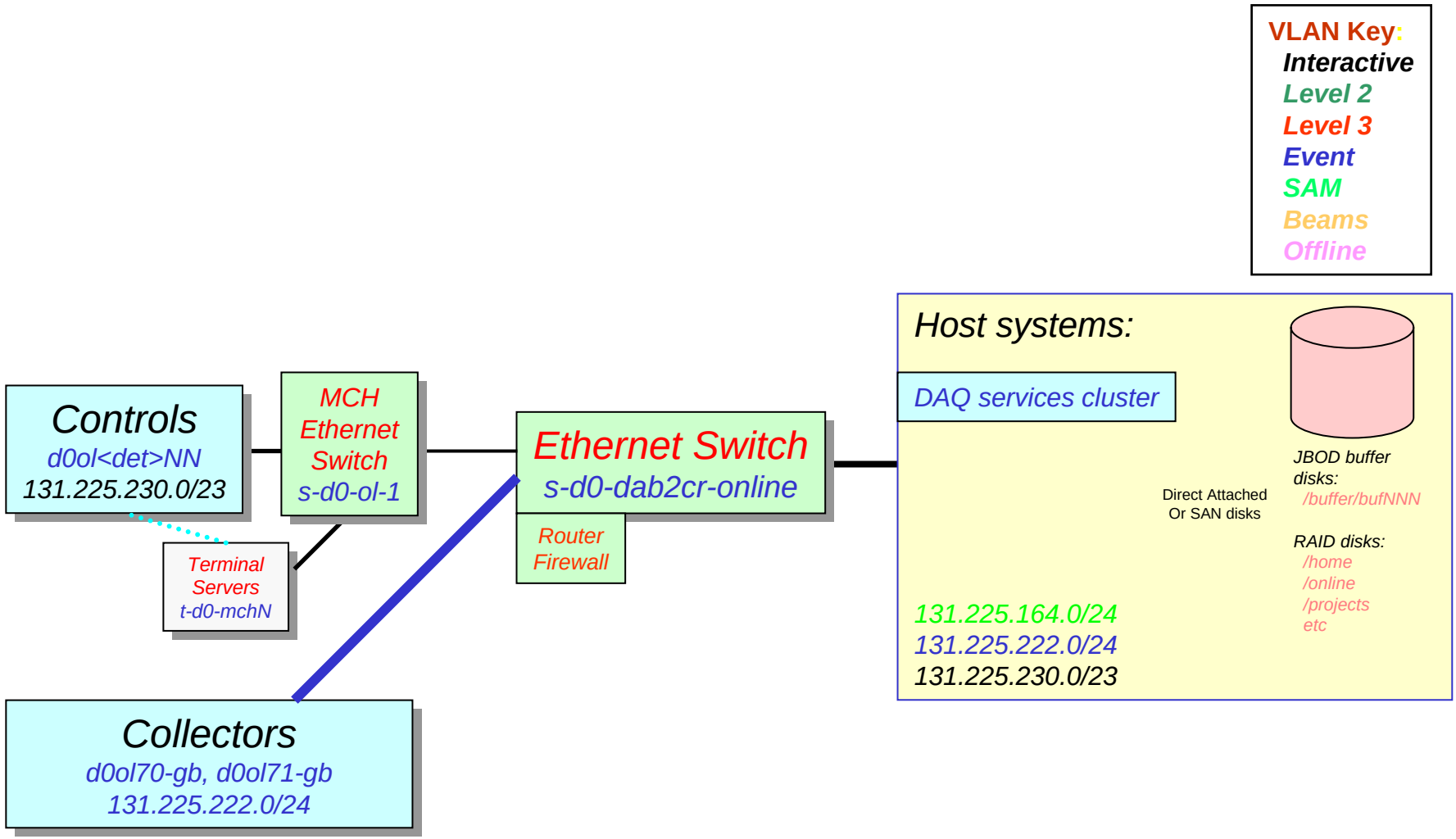

Event Data Path (SDAQ)

VLAN Key:
- *Interactive*
- *Level 2*
- *Level 3*
- *Event*
- *SAM*
- *Beams*
- *Offline*

Control system IOCs in readout crates can access data just like the SBCs

A Data Merger (DM) task on the Host consolidates event fragments from different crates

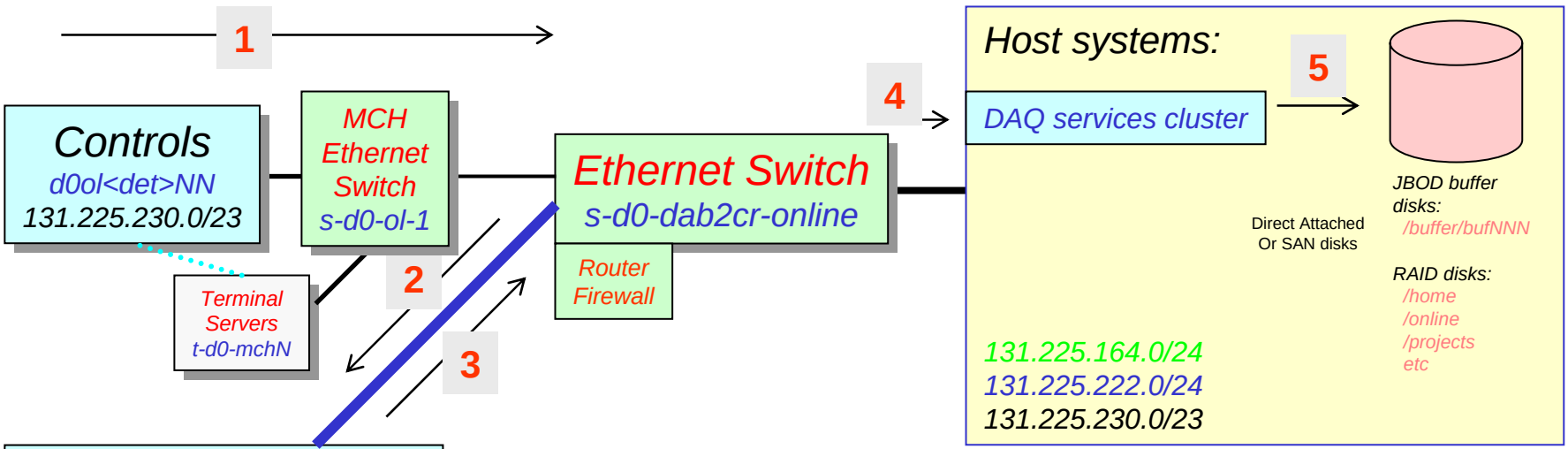

SDAQ data is inserted into the data path at the Collectors, and follows a similar path to the Hosts

The SDAQ process acts as the COOR helper to configure the IOCs and DM

SDAQ Event Data Flow

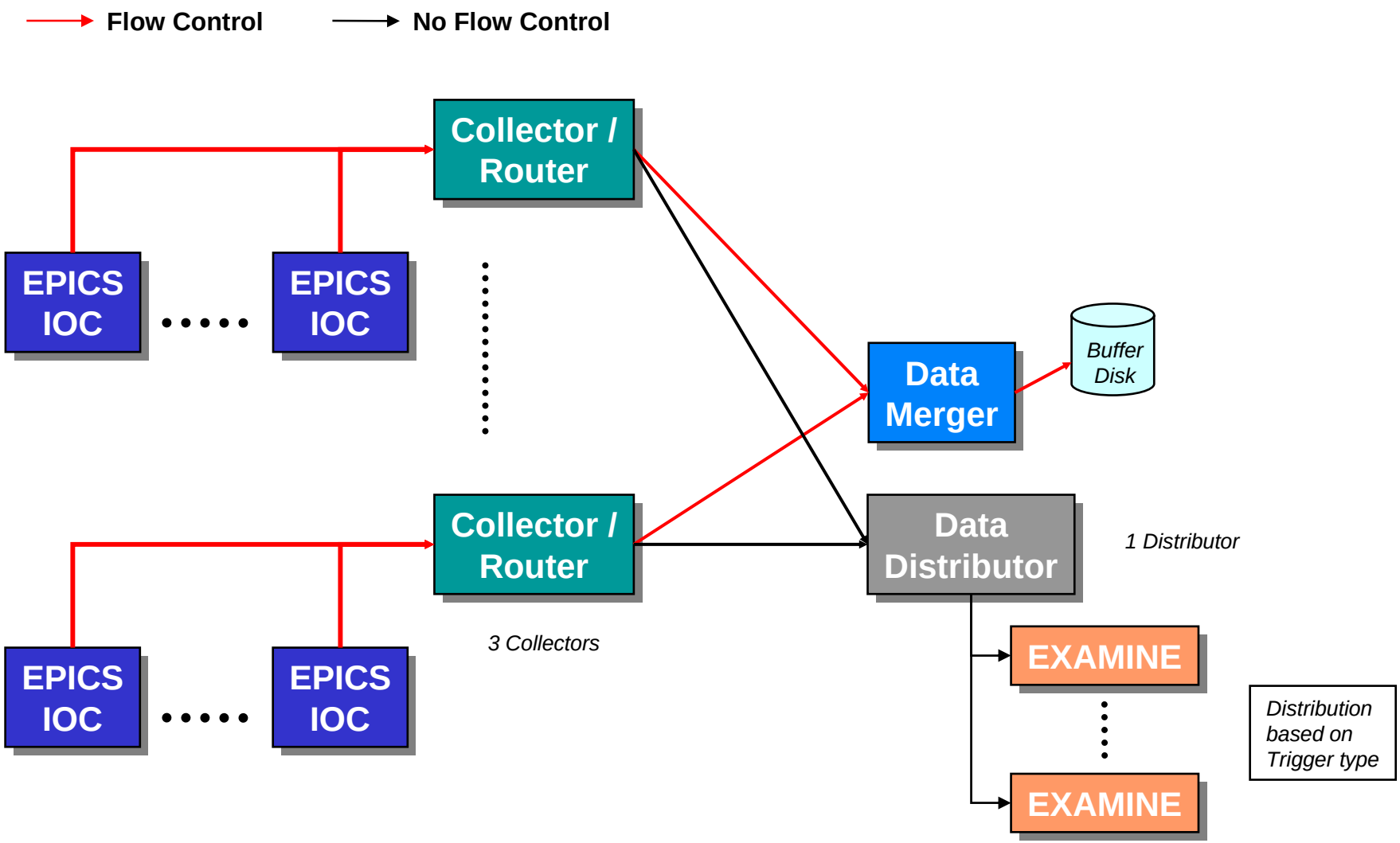

Event data monitoring

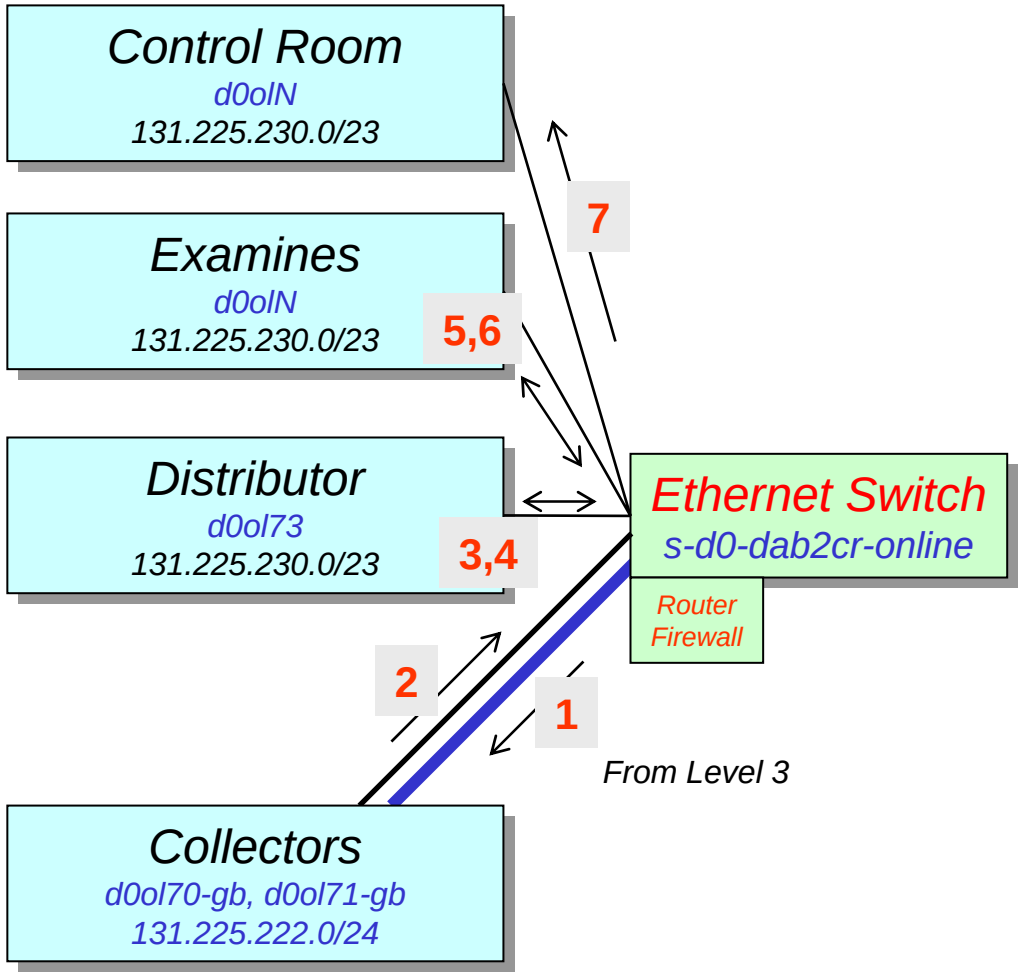

VLAN Key:
- ***Interactive***
- ***Level 2***
- ***Level 3***
- ***Event***
- ***SAM***
- ***Beams***
- ***Offline***

Important point here is that the nodes involved are essentially interchangeable

DØ Online Monitoring Architecture

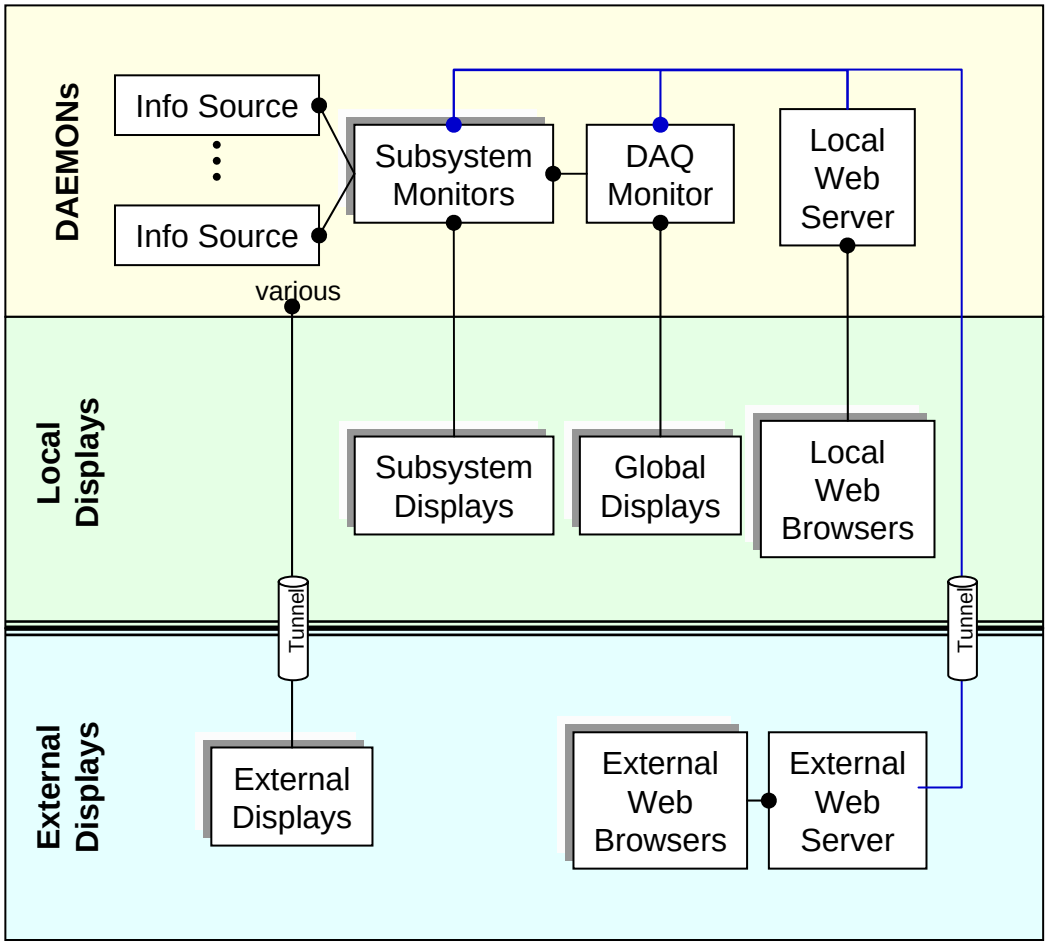

Info Sources:
- SBCs
- Level 1 / 2 / 3
- C/R, DL, DD

Subsystem Monitor optional intermediate

Server ●—— Client

Web Servers get info directly from Monitors or from shared disk areas

External Web Server and Displays require ACL tunnel, read-only

No external access to Local Web Server

Draft 1/22/02 S.Fuess

Assignments

- Application / service assignments kept at

  /online/data/d0online_names/d0online_names.py

  If a node dies and the application is relocated, this file must be edited and the instructions within followed

- Node assignments

  http://www-d0online.fnal.gov/sys/operations/node_assignments.txt

  http://www-d0online.fnal.gov/sys/operations/group_assignments.txt

- Disk assignments

  http://www-d0online.fnal.gov/sys/operations/disk_assignments.txt

Things you need to know…

- DAQ status page

  http://www-d0online.fnal.gov/www/daq/operations/status/onlstatus.html

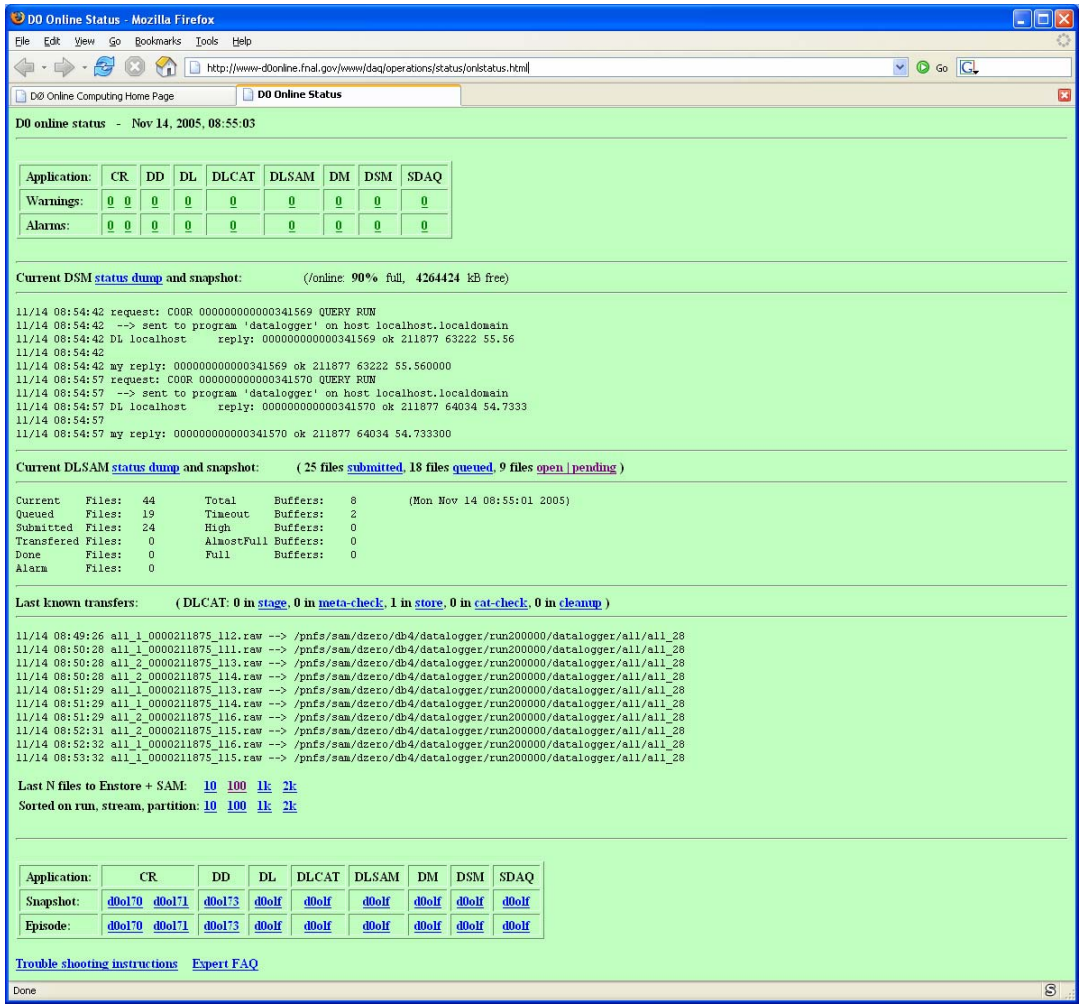

Warnings and Alarms

Transfers to SAM

Log file access

Things you need to know…

- Online alarms: “onl_….”
  - These are generated by Big Brother (BB)
    - Go to the Big Brother display for more detail
  - These are “transient” alarms
    - “One-shot”, just need one bad reading to fire
    - Disappear only after timeout period, which is ~15 minutes
  - BB works by having local BB processes on each node report back to the server (web server) node. The node noted in the alarm indicates either:
    - A report was not received from a node
    - The nodes report indicated a problem
  - Many of these “alarms” are generated from reading and parsing log files
    - These are frequently erroneous
    - Known problems:
      - Temperature and fan speed: if senseless number, then ignore it
  - Log into the node and check!
    - For example, if there is a connection or ssh alarm, you shouldn’t be able to even log in

Things you need to know…

- Full disk warnings / alarms
  - Check alarm details to see which node / disk
  - Generated by Big Brother
    - So also look there for details
  - Often a user responsibility, not the system managers
  - Try to solve these yourself
    - Log into the node, determine major user
    - Pass problem to detector group
- How does d0ssh work?
  - It's a 2-line script: kinit & ssh
  - kinit uses a "keytab" file, tied to the (group) user name and specific to the node; grants a ticket with a special Kerberos principal
    - e.g. d0run/d0/d0ol69.fnal.gov@FNAL.GOV
  - Ssh requires a .k5login file in the target user's home area, containing the Kerberos principal specified in the keytab file
  - keytab files only set up on some nodes, for some users!