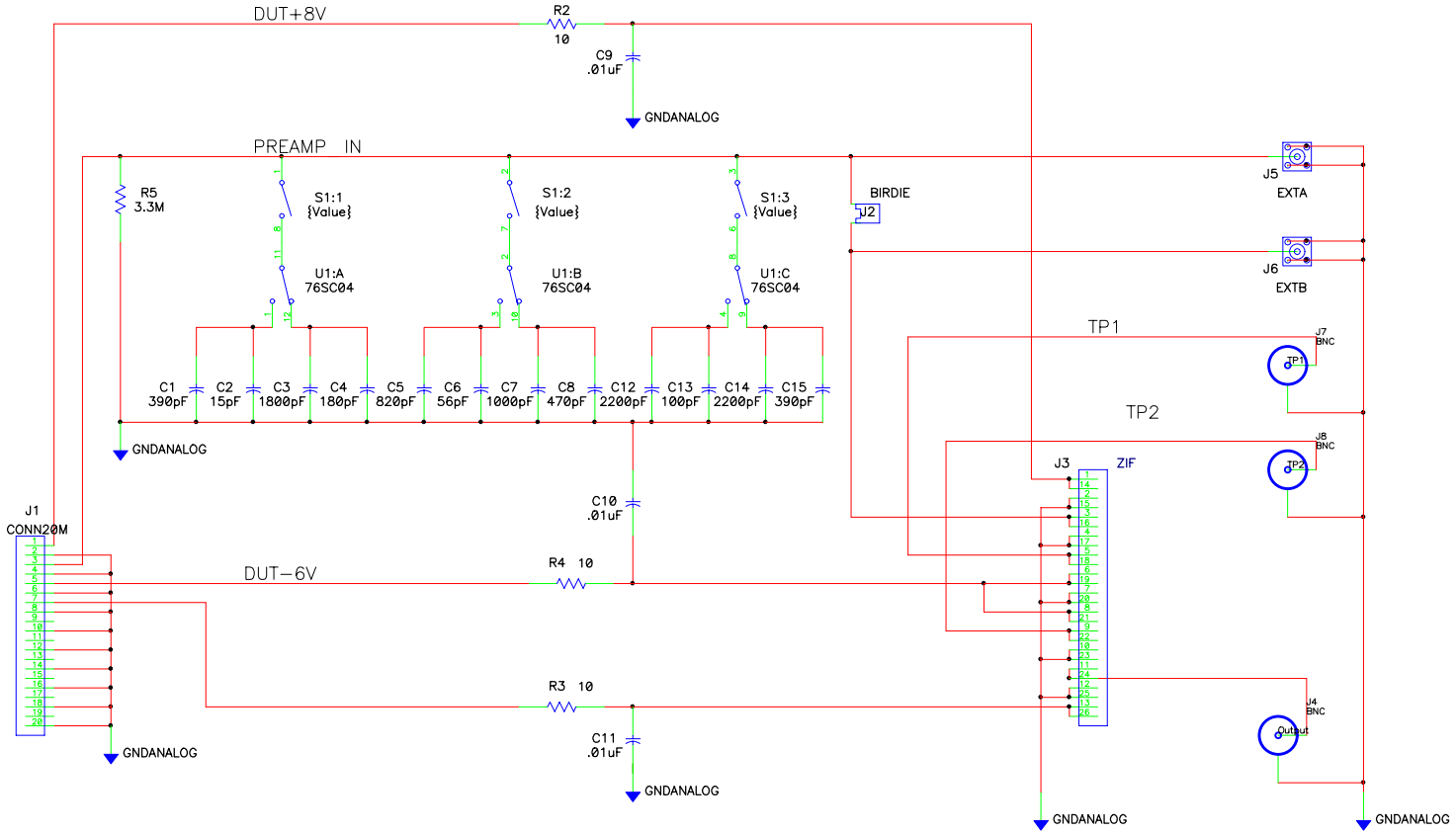

A=C1+C2
B=C1+C2+C5+C6
C=C12+C13
D=C7+C8+C14+C15

E=C1+C2
F=C5+C6
G=C7+C8
Ha=C3+C4
Hb=C12+C13
Hc=C14+C15
Hd=C3+C4+C5+C6
He=C5+C6+C12+C13
Hf=C1+C2+C5+C6+C12+C13
Hg=C7+C8+C14+C15

Title	ZIF Interface Calorimeter Test Jig	
Size C	Number	Rev –
Date 10−29−96		Drawn by Linda Bagby
Filename ZIF2.SCH		Sheet 1 of 1