REV.	DESCRIPTION	DRAWN / APPD.	DATE / DATE

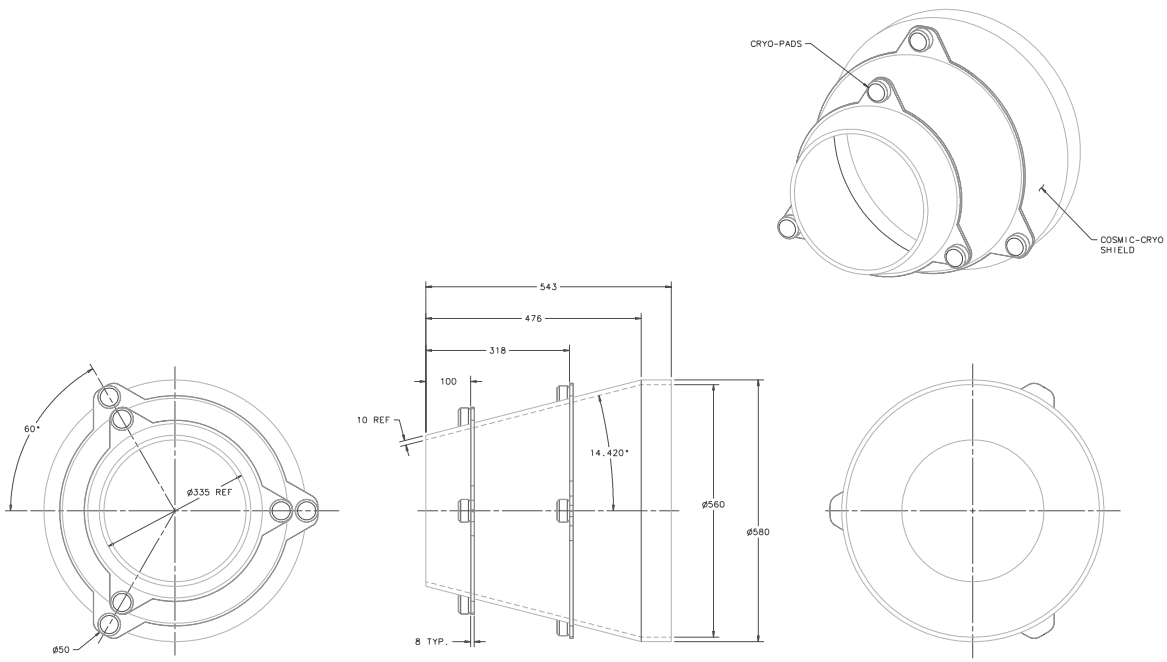

ALL DIMENSIONS IN MILLIMETERS

ITEM	PART NO.	DESCRIPTION OR SIZE	QTY.

PARTS LIST

UNLESS OTHERWISE SPECIFIED			ORIGINATOR	R. LAFEVER	
.XX	.XXX	ANGLES	DRAWN	C. REID	02-07-03
±	±	±	CHECKED		
1. BREAK ALL SHARP EDGES .02 MAX.			APPROVED		
2. DO NOT SCALE DRAWING.			USED ON		
3. DIMENSIONS BASED UPON ANSI Y14.5M-1982					
4. MAX. ALL MACH. SURFACES 125			MATERIAL	ALUMINUM...???	

FERMI NATIONAL ACCELERATOR LABORATORY
UNITED STATES DEPARTMENT OF ENERGY

SNAP INTEGRATION MODEL
CRYO/PARTICLE/LIGHT SHIELD

SCALE	FILMED	DRAWING NUMBER	REV.
1/4		SK 02_06_03	

CREATED WITH I-DEAS 4.1 USER NAME:CREID

INCHES METRIC