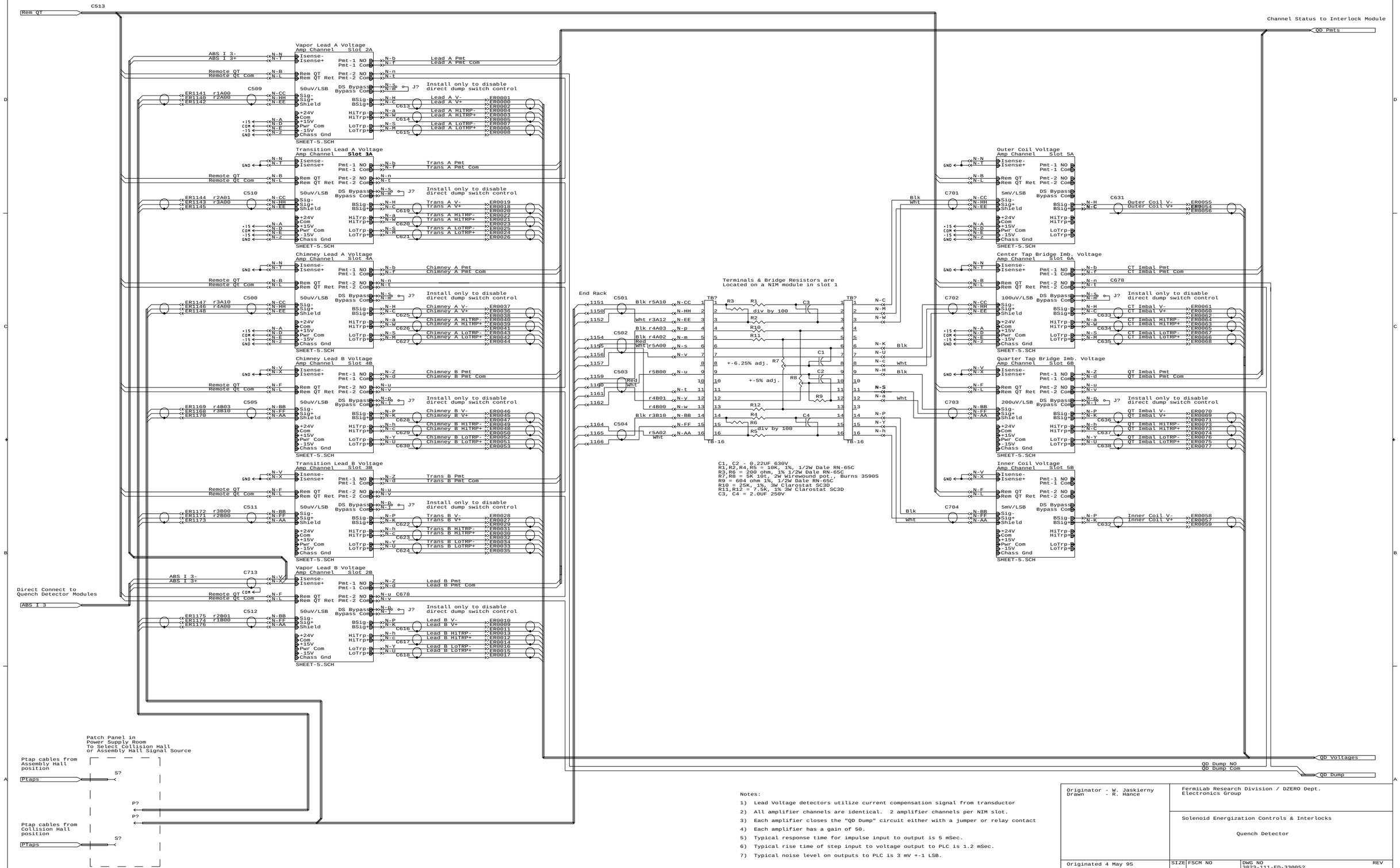

Notes:

1) Lead Voltage detectors utilize current compensation signal from transductor
2) All amplifier channels are identical. 2 amplifier channels per NIM slot.
3) Each amplifier closes the "QD Dump" circuit either with a jumper or relay contact
4) Each amplifier has a gain of 50.
5) Typical response time for impulse input to output is 5 mSec.
6) Typical rise time of step input to voltage output to PLC is 1.2 mSec.
7) Typical noise level on outputs to PLC is 3 mV +-1 LSB.

Originator - W. Jaskierny Drawn - R. Hance	FermiLab Research Division / DZERO Dept. Electronics Group
	Solenoid Energization Controls & Interlocks Quench Detector
Originated 4 May 95 Last Revision 14 Sep 1999	SIZE D · FSCM NO · DWG NO 3823-111-ED-330052 · REV
September 14, 1999	SCALE · SHEET 4 OF 17