Notes:
Measured frequency response and noise levels
with 200 ft. RG-108 cable on input
with 20K ohms source resistance
rise time measured from 10% to 90%
of output with square wave input:

TP5: 7mVp-p 25 KHz noise
-3DB @ 1KHz
-6DB @ 1.65KHz
rise time = 400 uSec

TP9: 1mVp-p 25KHz noise (see "trip response vs frequency control note)
-3DB @ 165Hz
-6DB @ 240Hz
rise time = 3 mSec

TP10 to TP11: 2mVp-p 25 KHz noise
-3DB @ 350 Hz
-6DB @ 660 Hz
rise time = 800 uSec

TP3, TP4, TP5, TP7 and TP8 are external test points. All others are internal.

K1 = C.P. Clare LX200E00

Bracketed NIM assignments are for channel B, all other channel A or common

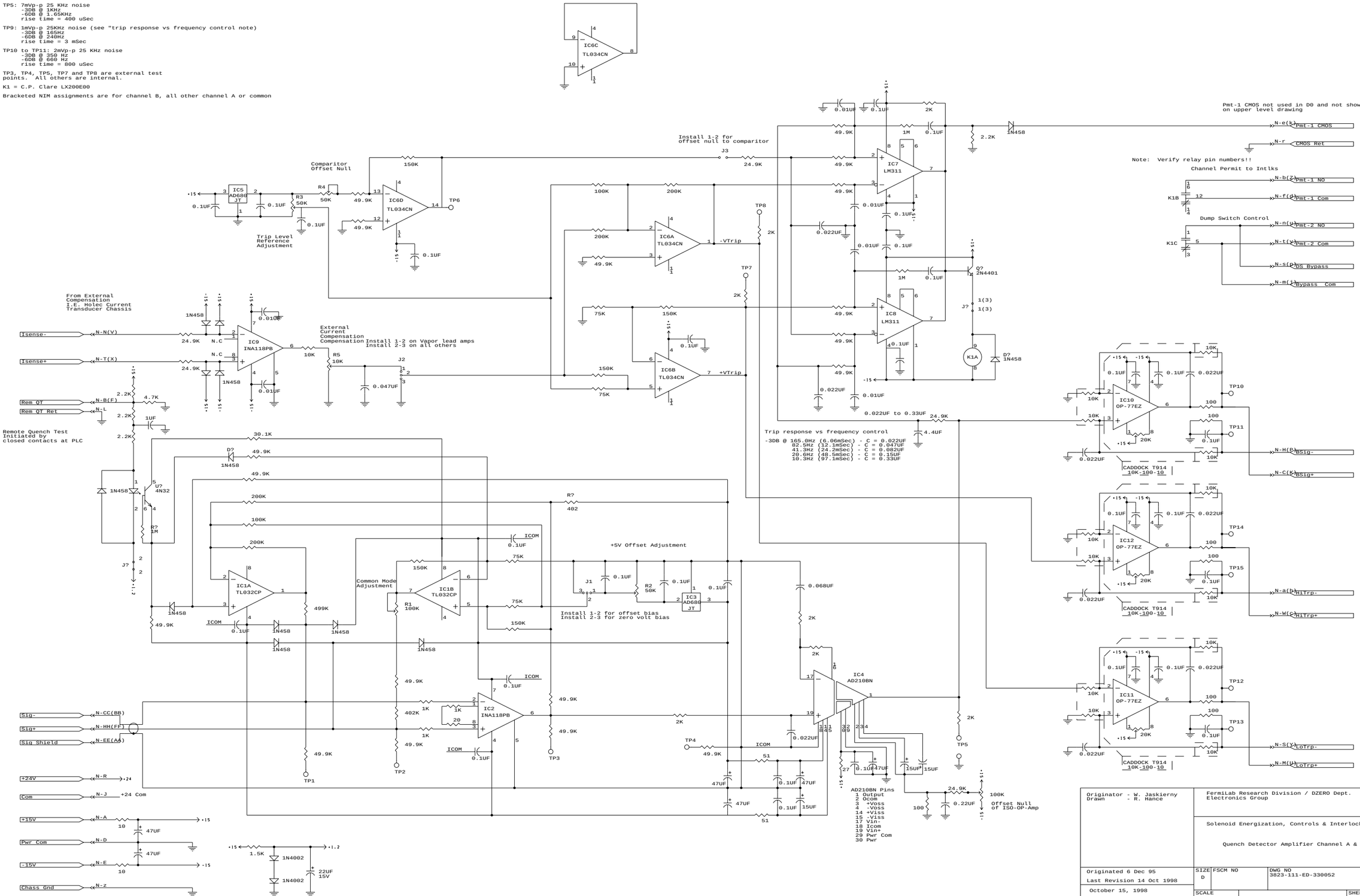

Originator - W. Jaskierny Drawn - R. Hance	FermiLab Research Division / DZERO Dept. Electronics Group
	Solenoid Energization, Controls & Interlocks Quench Detector Amplifier Channel A & B
Originated 6 Dec 95 Last Revision 14 Oct 1998 October 15, 1998	SIZE D · FSCM NO · DWG NO 3823-111-ED-330052 · REV SCALE · SHEET 5 OF 17