Rick Hance

Engineering Note

Date: 10/29/98
Rev Date:

Project:
Doc. No: H981029A

Subject: Solenoid Resistances at Room Temperature

This note documents the resistances of various components of the solenoid at room temperature. The data was obtained by measuring the voltage drops between the test points with 10A of current flowing in the circuit.

Conditions: Temperature = 278 deg. K
Stimulating current = 10A

Test Points	Voltage Drop (V)	Resistance (Ohms)
1A0-2A0	378×10^{-6}	36.8×10^{-6}
2A0-3A0	698×10^{-6}	69.8×10^{-6}
3A1-4A0	38.2×10^{-3}	3.83×10^{-3}
V8-V7	308×10^{-6}	30.8×10^{-6}
V7-V4	14.8×10^{-3}	1.48×10^{-3}
V4-V3	560×10^{-6}	56.0×10^{-6}
4A0-5A0	7.72	772×10^{-3}
5A0-5A1	4.46×10^{-3}	446×10^{-6}
5A1-5B0	3.30	330×10^{-3}
5B0-4B0	3.25	325×10^{-3}
V2-V1	590×10^{-6}	59.0×10^{-6}
V1-V6	14.8×10^{-3}	1.48×10^{-3}
V6-V5	323×10^{-6}	32.3×10^{-6}
4B0-3B1	38.6×10^{-3}	3.86×10^{-3}
3B0-2B0	697×10^{-6}	69.7×10^{-6}
2B0-1B0	371×10^{-6}	37.1×10^{-6}
V8-V3	15.7×10^{-3}	1.57×10^{-3}
V3-4A0	20.7×10^{-3}	2.07×10^{-3}
V2-V5	15.7×10^{-3}	1.57×10^{-3}
4B0-V2	20.8×10^{-3}	2.08×10^{-3}

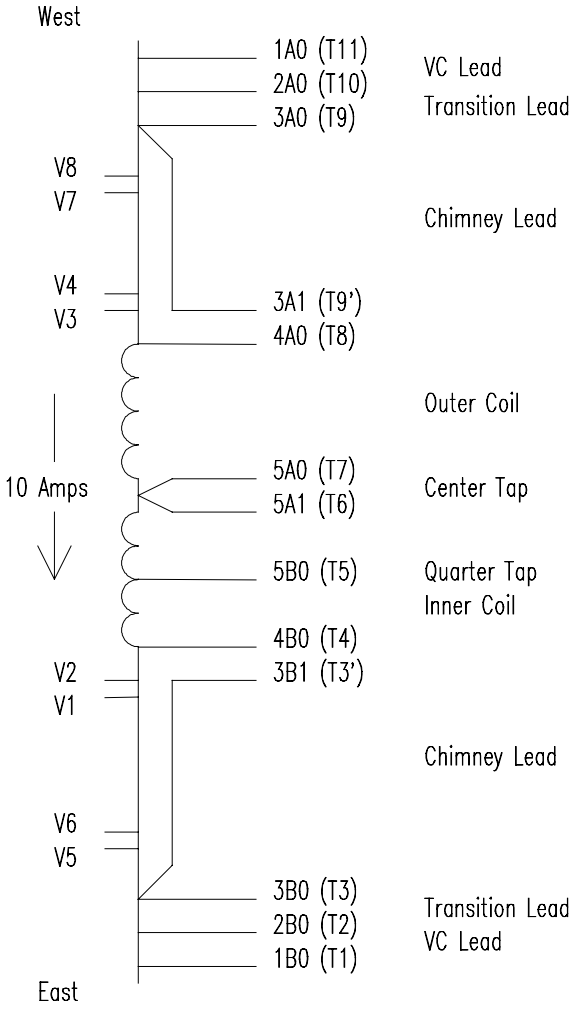

See Next page for direct comparison of West & East values.

Direct Comparison of East & West Values:

Description	West Test Points (A side)	Resistance (Ohms)		Resistance (Ohms)	East Test Points (B Side)
Vapor Cooled Leads	1A0-2A0	36.8×10^{-6}		37.1×10^{-6}	2B0-1B0
Transition Leads	2A0-3A0	69.8×10^{-6}		69.7×10^{-6}	3B0-2B0
Chimney Leads (Incl Fld Joints)	3A1-4A0	3.83×10^{-3}		3.86×10^{-3}	4B0-3B1
Field Joint at Dewar	V8-V7	30.8×10^{-6}		32.3×10^{-6}	V6-V5
Chimney Between Field Joints	V7-V4	1.48×10^{-3}		1.48×10^{-3}	V1-V6
Field Joint at Solenoid	V4-V3	56.0×10^{-6}		59.0×10^{-6}	V2-V1
Coil (Outer Only)	4A0-5A0	772×10^{-3}		N/A	N/A
Between Center Tap Leads	5A0-5A1	446×10^{-6}		N/A	N/A
½ Inner Coil	5A1-5B0	330×10^{-3}		N/A	N/A
½ Inner Coil	5B0-4B0	325×10^{-3}		N/A	N/A
Field Joints Inclusive	V8-V3	1.57×10^{-3}		1.57×10^{-3}	V2-V5
Solenoid to First Field Joint	V3-4A0	2.07×10^{-3}		2.08×10^{-3}	4B0-V2