The D0 Upgrade

Ulrich Heintz
Fermilab

- Introduction
- The D0 Upgrade
- Central Fiber Tracker
- Silicon Vertex Detector
- Conclusion

7th Pisa Meeting on Advanced Detectors,
La Biodola, Isola d'Elba, May 25-31, 1997

The D0 Collaboration

Universidad de los Andes, Bogota, Colombia
University of Arizona
Boston University
Brookhaven National Laboratory
Brown University
Universidad de Buenos Aires, Buenos Aires, Argentina
University of California, Davis
University of California, Irvine
University of California, Riverside
LAFEX, Centro Brasileiro de Pesquisas Fisicas, Rio de Janeiro, Brazil
CINVESTAV, Mexico City, Mexico
Columbia University
Delhi University, Delhi, India
JINR Dubna, Russia
Fermi National accelerator Laboratory
Florida State University
University of Hawaii
University of Illinois at Chicago
Indiana University
Iowa State University
Korea University, Seoul, Korea
Kyungsung University, Pusan, Korea
Institute of Nuclear Physics, Krakow, Poland
Lawrence Berkeley National Laboratory
University of California, Berkeley
University of Maryland
University of Michigan
Michigan State University
Institute for Theoretical and Experimental Physics, Moscow, Russia
Moscow State University, Russia
University of Nebraska
New York University
Northeastern University
Northern Illinois University
Northwestern University
University of Notre Dame
University of Oklahoma
Punjab University, Chandigarh, India
Petersburg Nuclear Physics Institute, St. Petersburg, Russia
Institute for High Energy Physics, Protvino, Russia
Purdue University
Rice University
Universidade Estual do Rio de Janeiro, Brazil
University of Rochester
DAPNIA/SPP-CE Saclay, Gif-sur-Yvette, France
Seoul National University, Seoul, Korea
State University of New York, Stony Brook
Tata Institute of Fundamental Research, Mumbai, India
University of Texas, Arlington
Texas A&M University

Collaboration of 10 countries,

53 institutions,

450 physicists

The D0 Detector

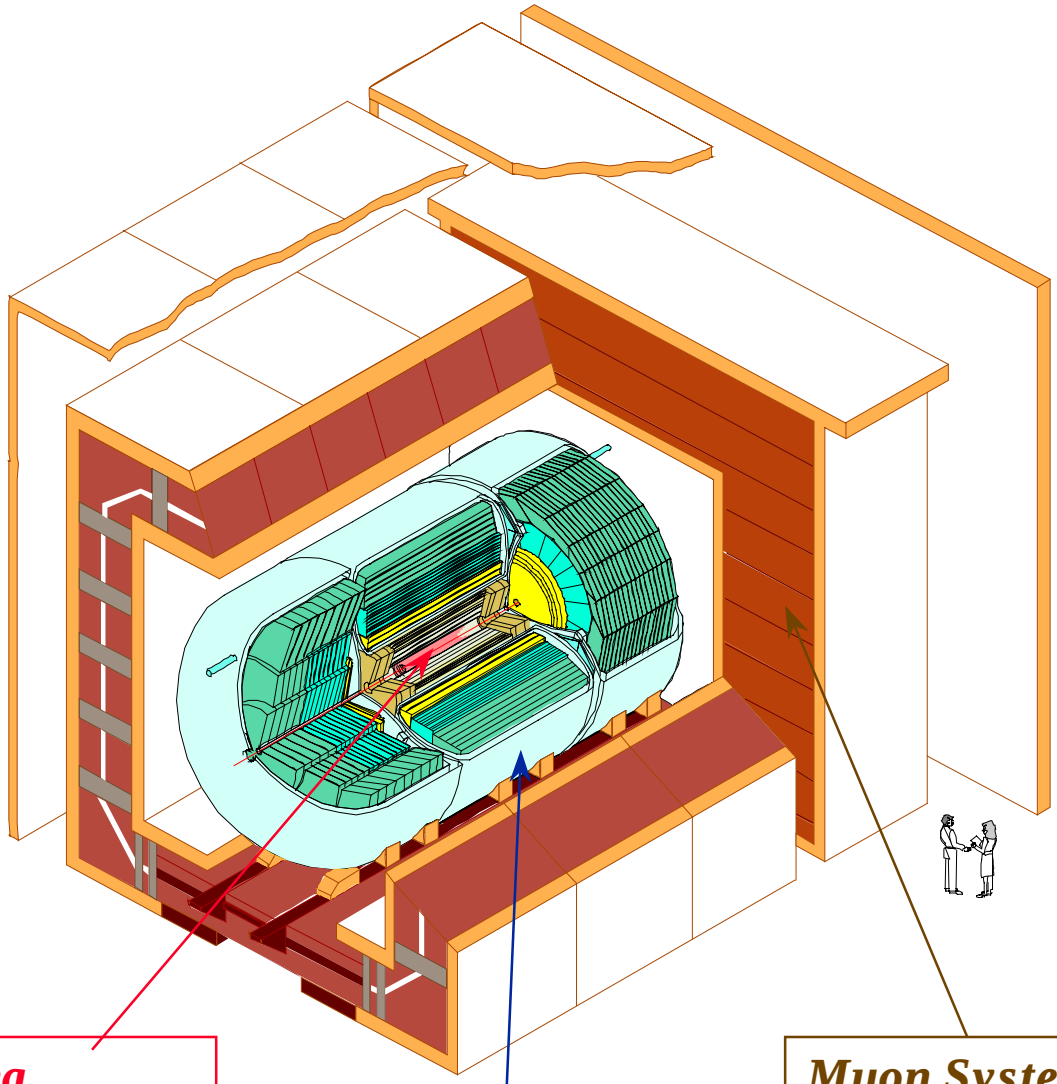

Tracking
Vertex Chamber
TRD
Drift Chamber

Calorimeter
Uranium-liquid Argon
60,000 channels

Muon System
1.9T mag. Fe
Prop. drift tubes
40,000 channels

Physics Highlights

- **Tevatron Run 1 (1992-1996)**
  - **Integrated Luminosity = 125 pb^{-1}**
- **Probing the Standard Model...**
  - **Discovery of Top Quark**
    - **m_t = 173.3±5.6(stat)±6.2(syst) GeV/c^2**
  - **Precision Measurement of W Boson Mass**
    - **m_W = 80.44±0.11 GeV/c^2 [preliminary]**
  - **Limits on Anomalous WWγ Couplings**
- **...and beyond**
  - **Limits on**
    - **Supersymmetry**
    - **Heavy Gauge Bosons**
    - **Leptoquarks**
- **Tests of QCD**
  - **Jet Shape and Production**
  - **b Quark Production**

Collider Schedules

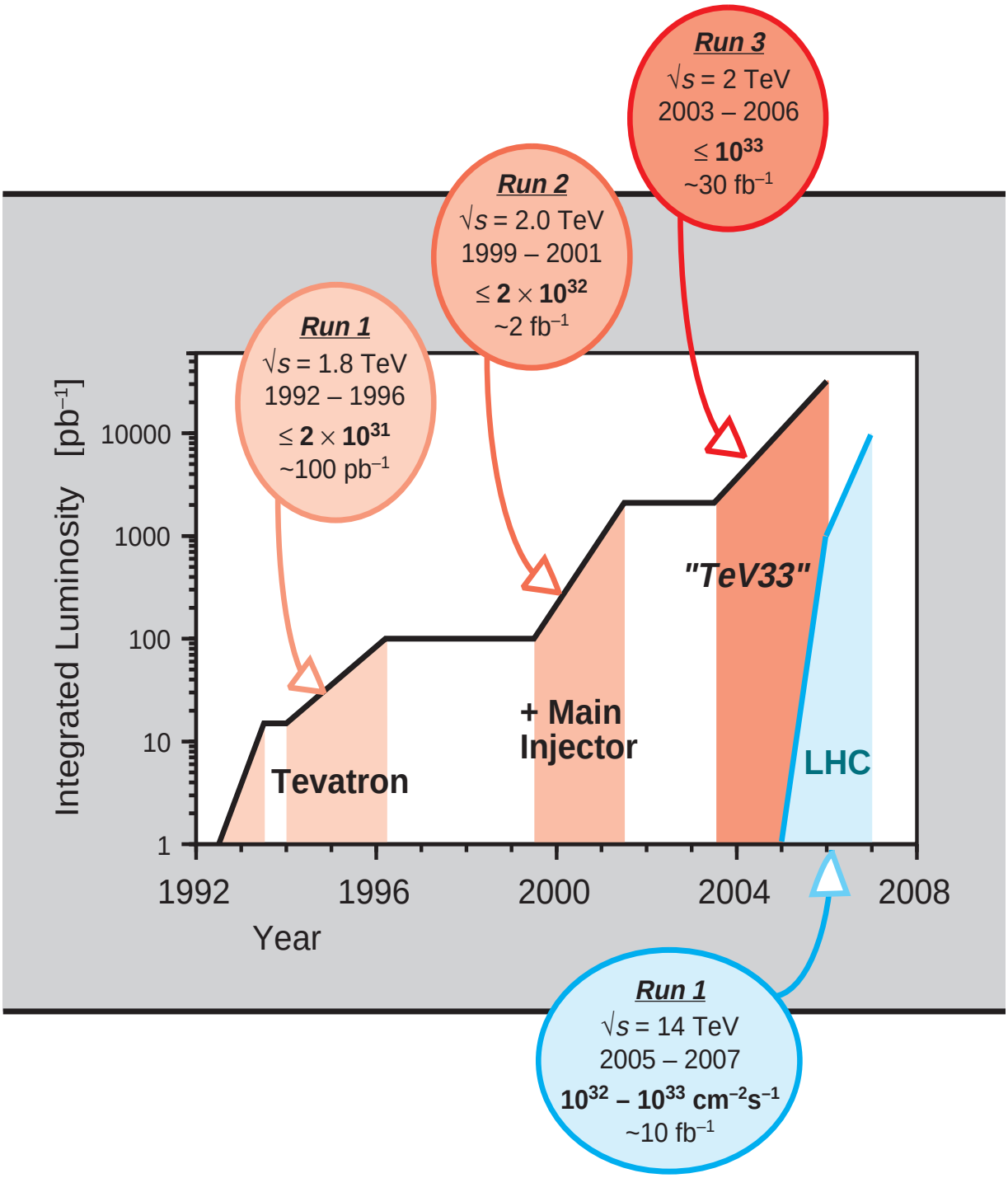

Motivation for Upgrade

- **Evolving Tevatron Environment**

	Run 1	Run 2
L_{max}	$2\ 10^{31}/cm^2/s$	$2\ 10^{32}/cm^2/s$
E_{com}	1.8 TeV	2.0 TeV
Δt	3.5 μs	396→132 ns
$\int L\ dt$	$120\ pb^{-1}$	$2\ fb^{-1}$

  - **Radiation Hard Tracker Design**
    - **Scintillating Fibers**
  - **Faster Electronics, Pipelines, Trigger**
    - **Calorimeter, Muon System**

- **Enhanced Capabilities**
  - **Charge, Momentum Measurement**
    - **Central Magnetic Field**
  - **Secondary Vertex Detection**
    - **Silicon Strips**

D0 Upgrade

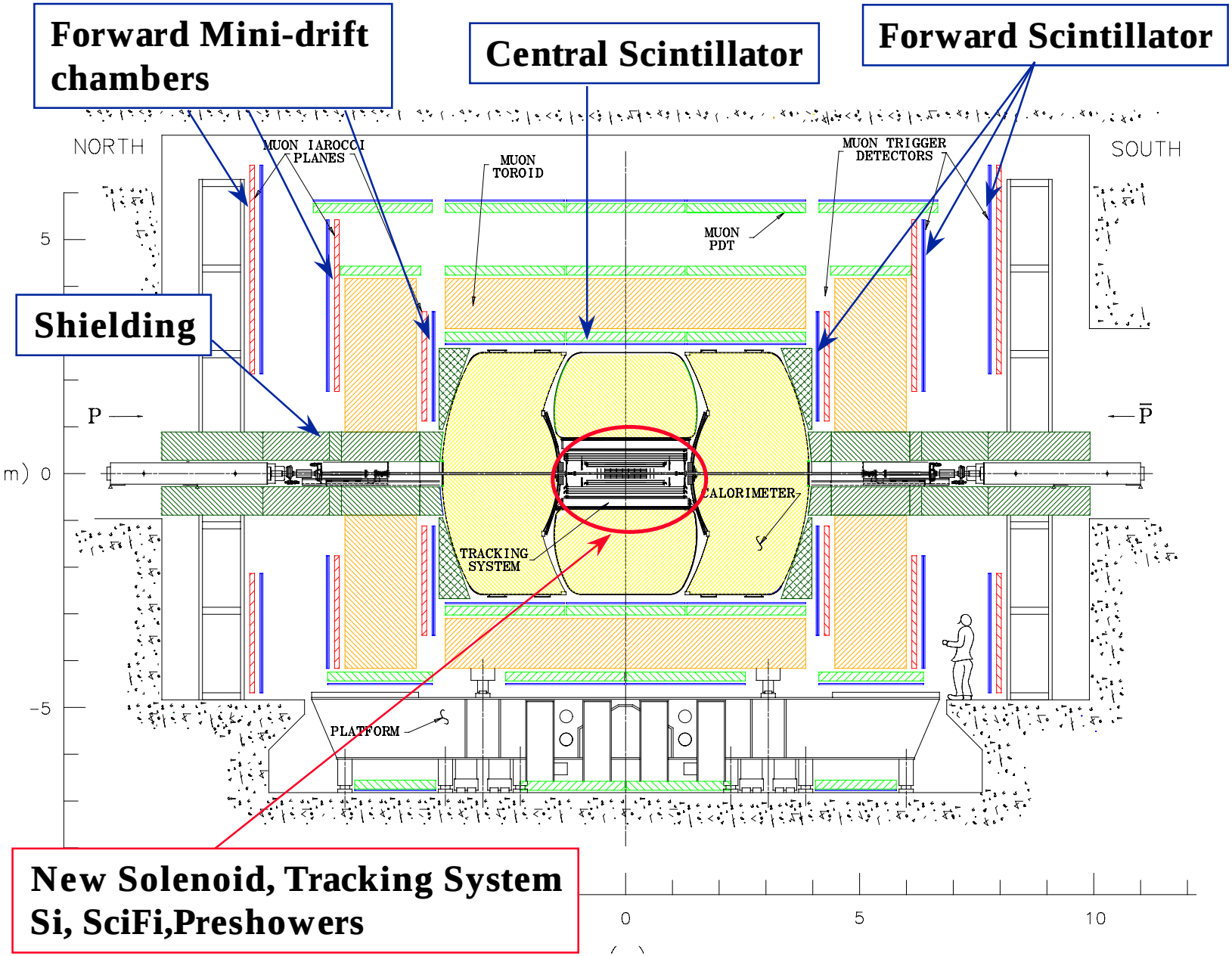

+ New Electronics, Trig, DAQ

D0 Upgrade Tracking

- Silicon Tracker
  - Four layer barrels (double / single sided)
  - Interspersed double sided disks
  - **800,000 channels**
- Fiber Tracker
  - Eight layers sci-fi ribbon doublets (z-u or z-v)
  - 77,000 830 μm fibers w / VLPC readout
- Preshowers
  - Central
    - **Scintillator strips**
    - **6,000 channels**
  - Forward
    - **Scintillator strips**
    - **16,000 channels**
- Solenoid
  - **2T superconducting**

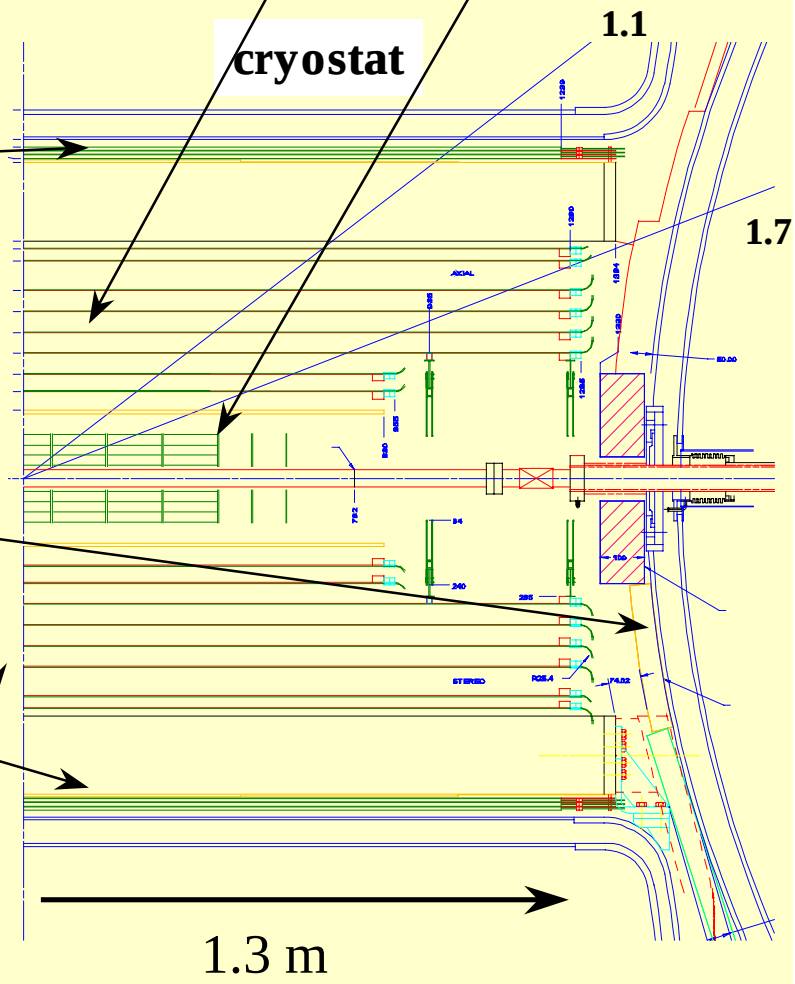

Silicon Vertex Detector

- **Characteristics**
  - **precision measurement of charged particle tracks with $|\eta| < 2.5$ near interaction point**
  - **size of luminous region: 25 cm**
  - **hit resolution: 10 μm**
  - **impact parameter resolution:**
    40 μm (xy), 100 μm (z)
  - **mechanical alignment to < 25 μm**
  - **strip position known to < 5 μm**
  - **radiation hard to 1 Mrad**
  - **operate at < 15° C**
  - **about 800,000 channels**
  - **< 1.5% bad channels**
  - **AC coupled double/single sided detectors**

Silicon Vertex Detector

4 layers per barrel

1. **(rϕ,90°)**
2. **(rϕ,2°)**
3. **(rϕ,90°)**
4. **(rϕ,2°)**

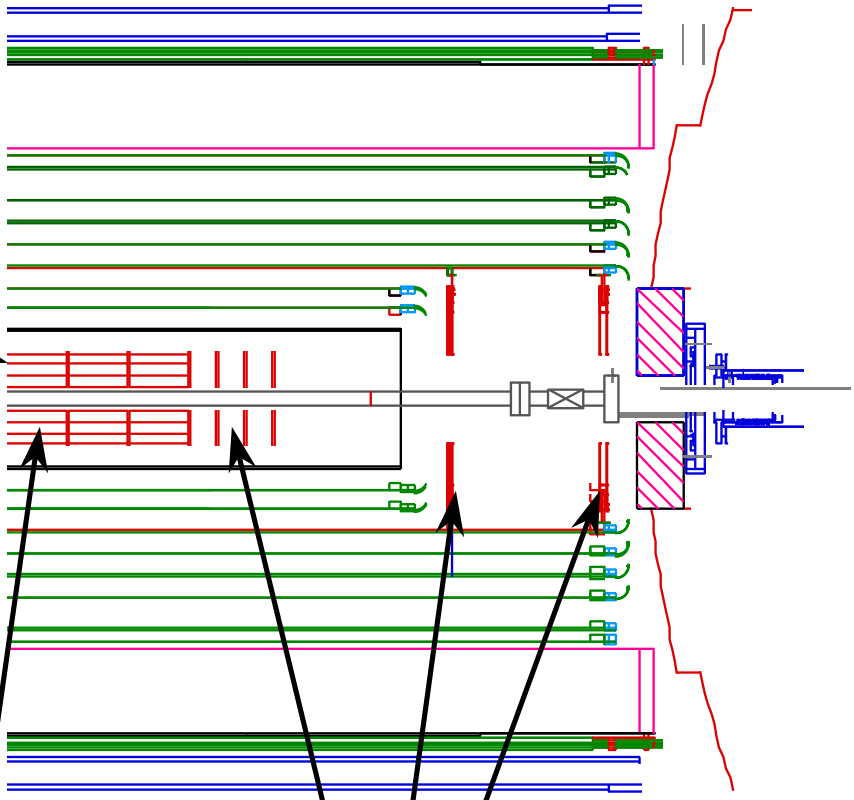

Barrel

Disks

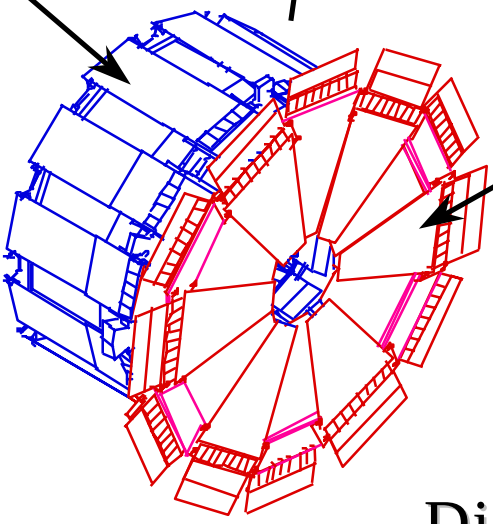

Disk / Barrel Module

Silicon Vertex Detector

- **Disks**
  - **small diameter disks (2.5<r<10 cm)**
    - ✻ 144 double sided detectors → 12 disks
    - ✻ 50 μm pitch (junction side)
    - ✻ 62.5 μm pitch (ohmic side)
    - ✻ $\pm 15^{o}$ stereo
  - **large diameter disks (9.5<r<20 cm)**
    - ✻ 384 single sided detectors → 4 disks
    - ✻ 40 μm strip pitch (80 μm readout)
    - ✻ $\pm 7.5^{o}$ stereo

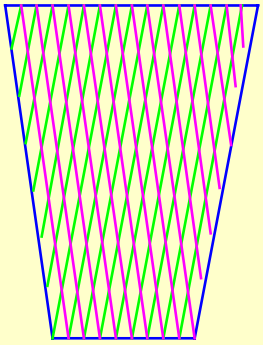

- **Barrels**
  - **6 barrel segments with 4 layers each**
  - **single sided (144)**
    - ✻ layers 1 , 3 in two outermost barrels.
  - **double sided with 90° strips (288)**
    - ✻ layers 1,3 50 & 100μm pitch, 2.1 cm wide
  - **double sided with 2° stereo (336)**
    - ✻ layers 2,4 50 & 62.5μm pitch, 3.4 cm wide

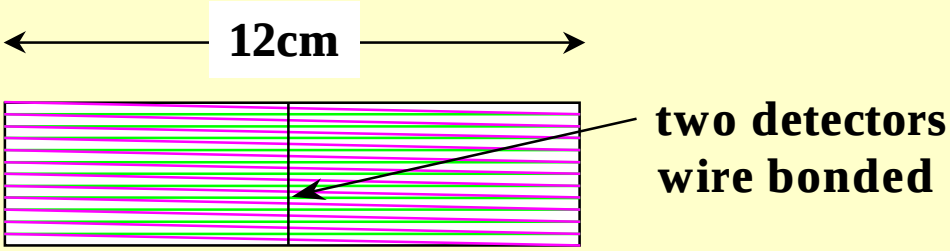

Silicon Vertex Detector

- SVXII chip
  - rad hard 1.2 μm CMOS technology
  - preamp / analog delay / ADC
  - 128 channels
  - 32 cell pipeline
  - 53 MHz readout
  - size: 6.2x9.7 mm
  - 5 mW / channel
- High Density Interconnect (HDI)
  - two layer fine pitch hybrid

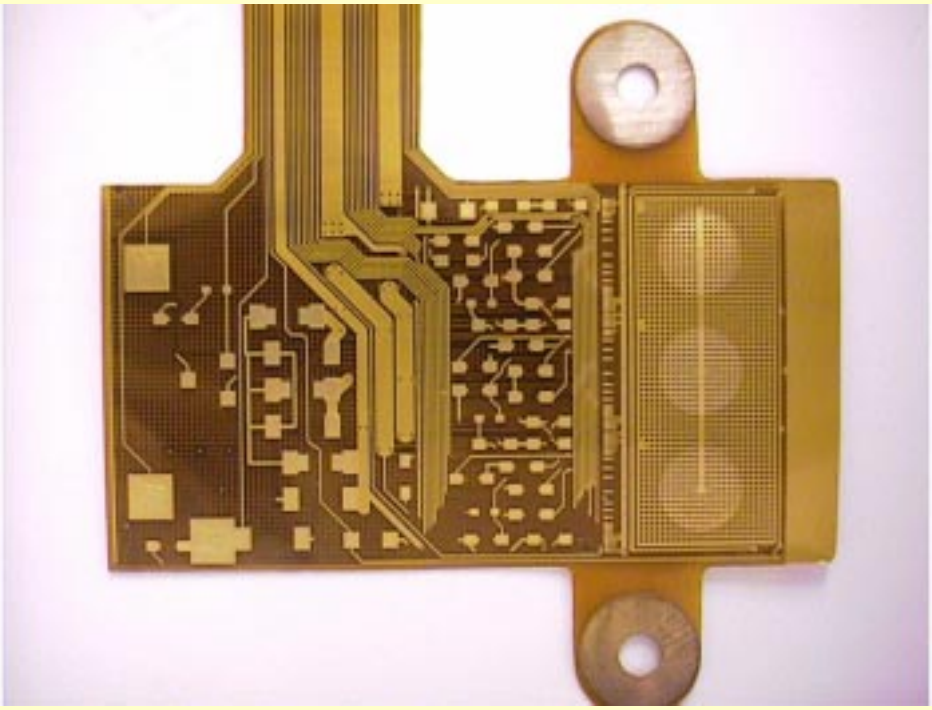

Fiber Tracker

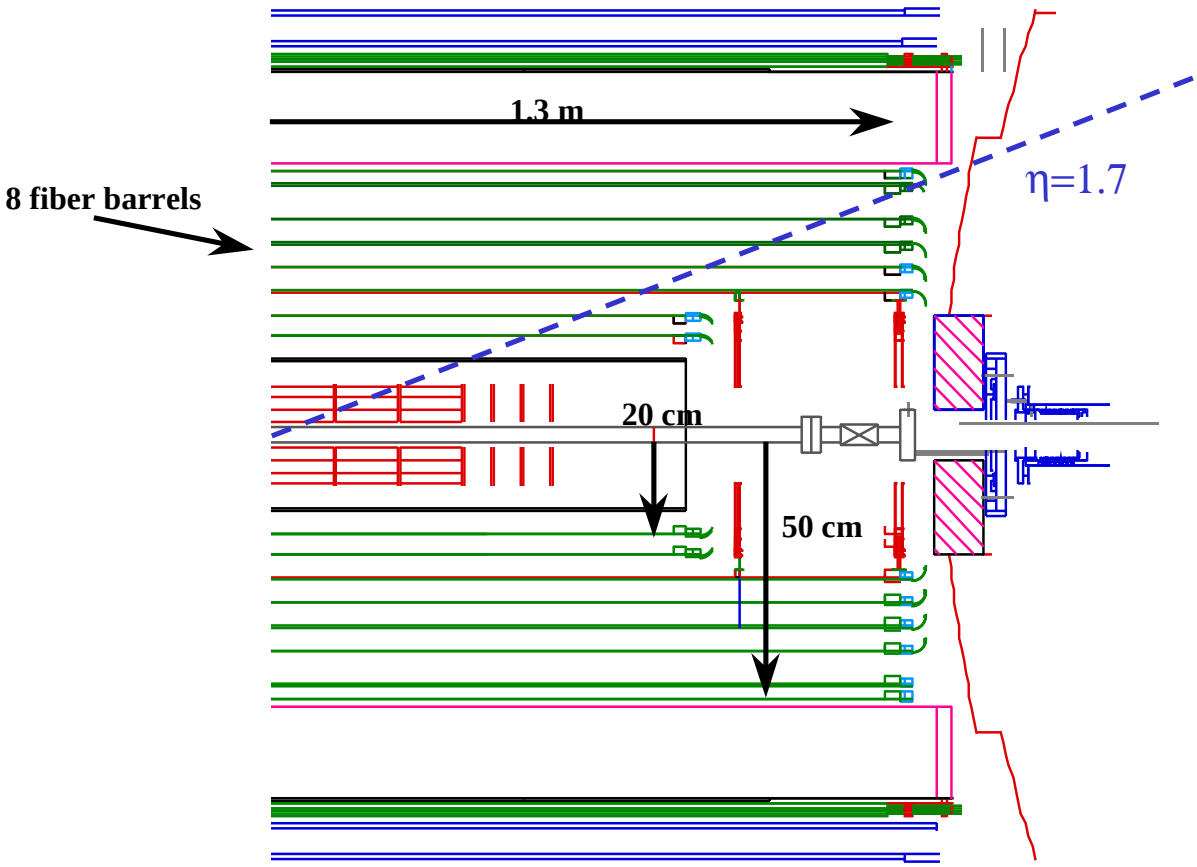

- **Performance Goals**
  - provide tracking with fast response and good resolution and granularity for $|\eta| < 1.7$
  - measure momentum and sign of charge
  - low mass ($\approx 0.06\ X_0$)
  - fast r-ϕ information for L1 trigger
  - 50 μm precision for fiber location
  - radiation hard

Fiber Tracker

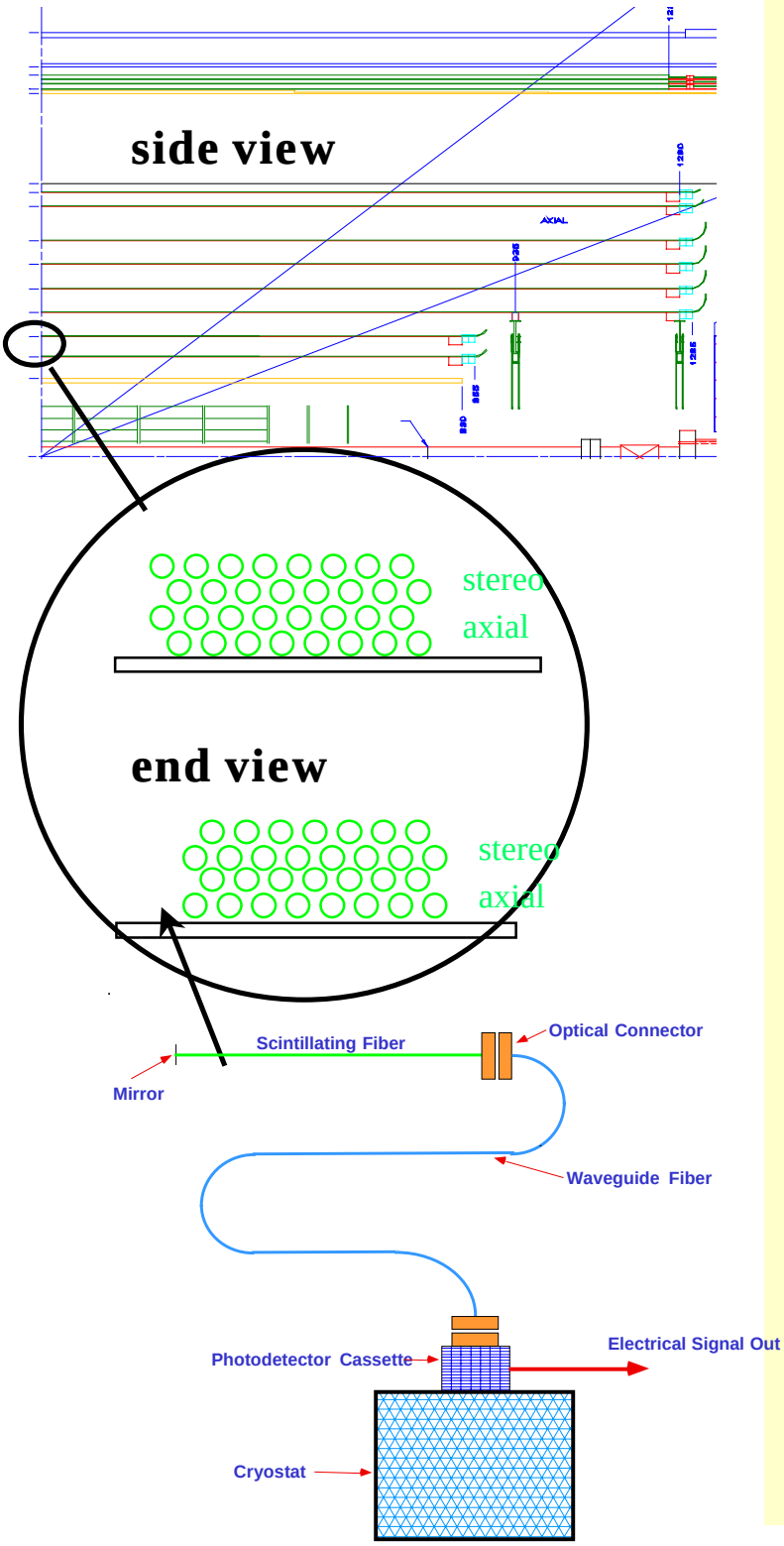

- **Barrels**
  - 8 carbon fiber barrels
  - 20<r<50cm
  - full coverage to η = 1.7
- **Scint Fibers**
  - 830μm $\varnothing$, multiclad
  - 2.6m active length
  - 10m clear waveguide to photodetector
  - rad hard (100 krad) (10yr @ 20cm @10^{32})
- **Fiber Ribbons**
  - 8 axial doublets
  - 8 stereo doublets (2° pitch)
- **Readout**
  - 77,000 channels
  - VLPC readout
  - run at low temp (9 K)
  - fast pickoff for trigger
  - SVXII readout

Fiber Tracker

- **Visible Light Photon Counter (VLPC)**

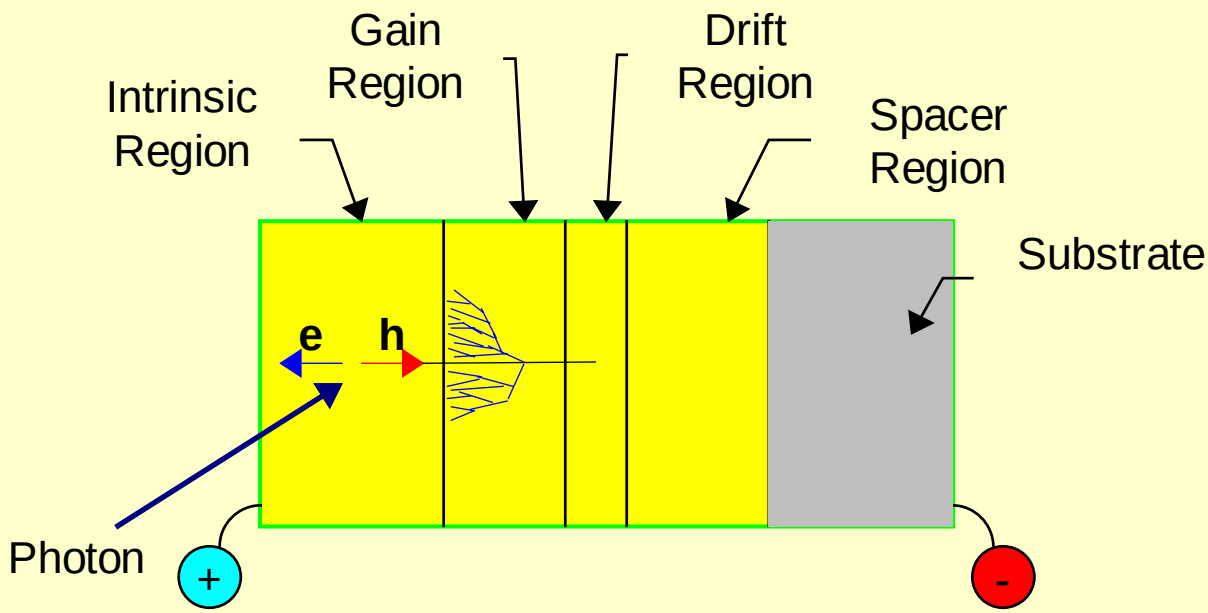

  - **Avalanche Photo Diode**
  - **well matched to light from fiber (λ = 525 nm)**
  - **quantum efficiency** $\approx 80\%$
  - **fast response, high rate capability**
  - **Si:As (band gap = 0.05 eV)**
  - **high gain** (≈ 40000) **, low gain dispersion**
  - **operate at**
    - ✻ **8<T<10 K**
    - ✻ **6<V_{bias}<7.5 V**

Fiber Tracker

- VLPC Efficiency at 40 MHz

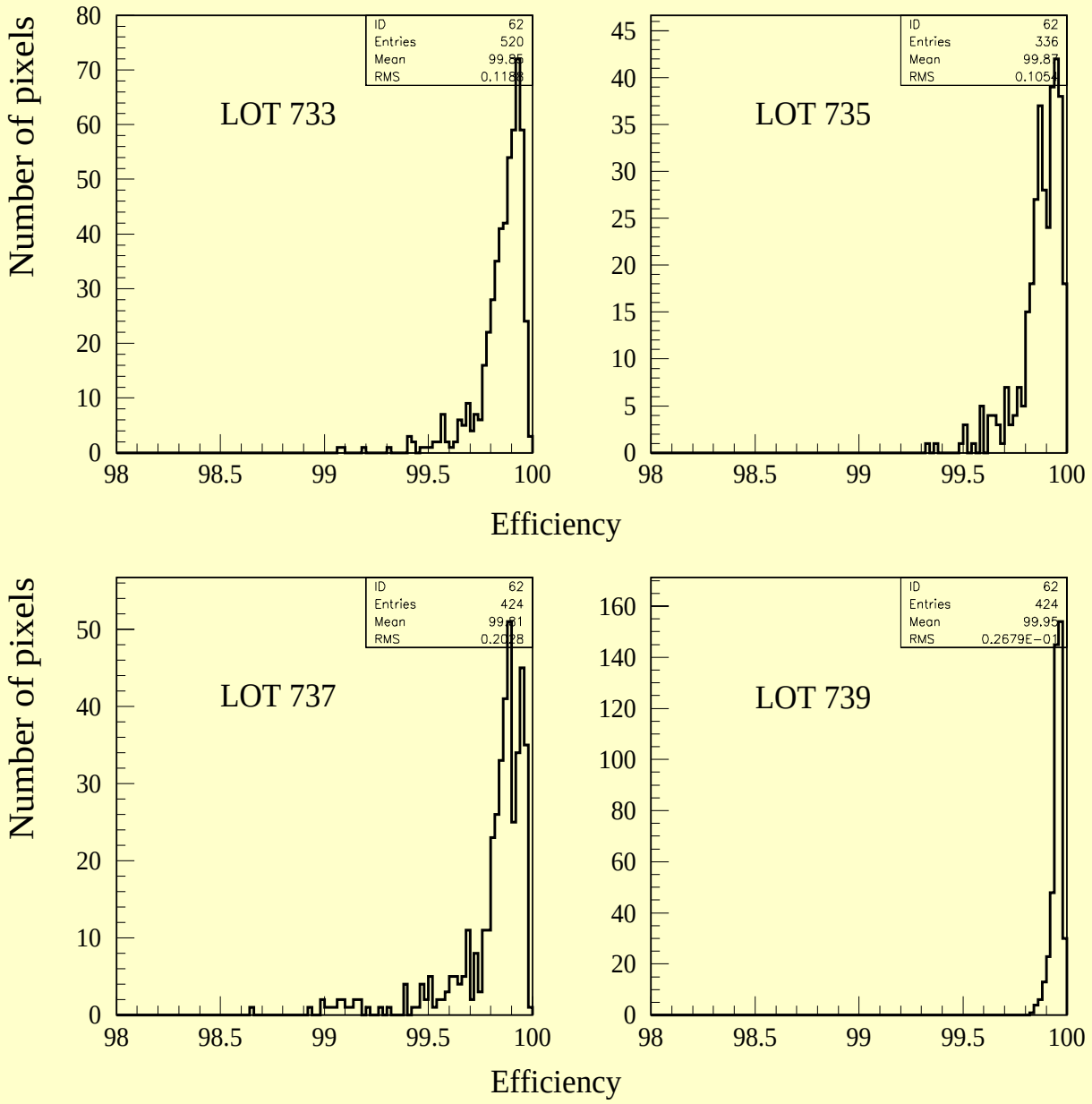

Efficiency calculated assuming 12 photoelectrons

Fiber Tracker

- **VLPC Yields**

	proposed	actual
Material Quality	82%	100%
Silicon Epitaxy	98%	100%
Array Processing	95%	95%
Wafer Quality	75%	100%
Dicing	98%	100%
Hybrid Assembly	98%	98%
Visual Screen	75%	98%
Hybrid Test	70%	95%
total	**27%**	**85%**

Fiber Tracker

- **VLPC Cassette**
  - **1024 channels**
  - **Design Complete**
  - **Fabricating Prototype**

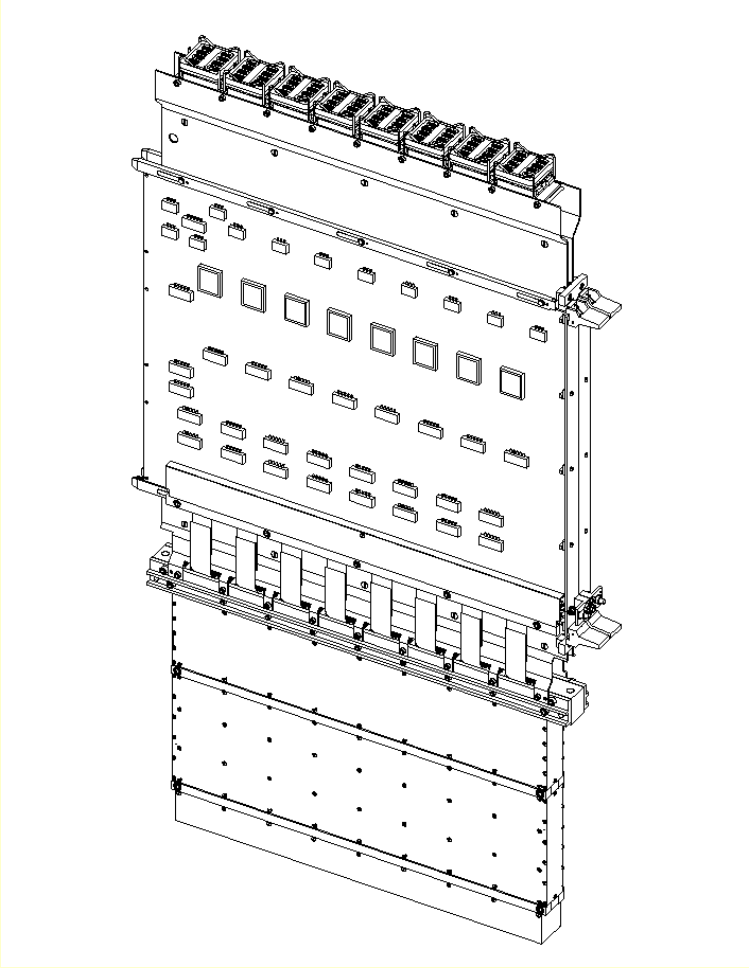

Fiber Tracker

- Cosmic Ray Test Results

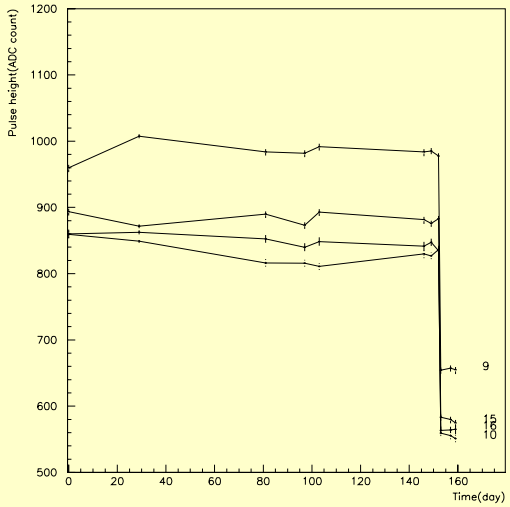

Long Term Stability

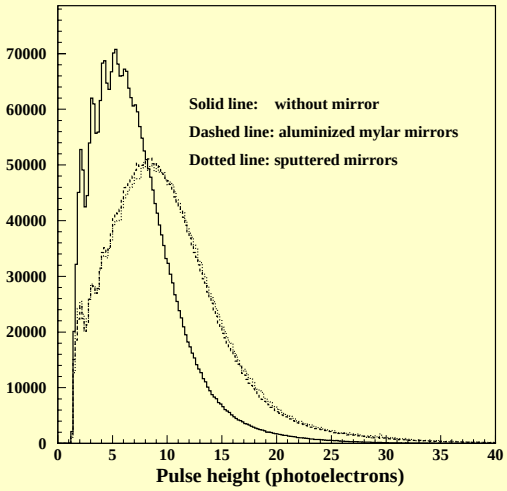

9 photo electrons/mip
(12 in final tracker)

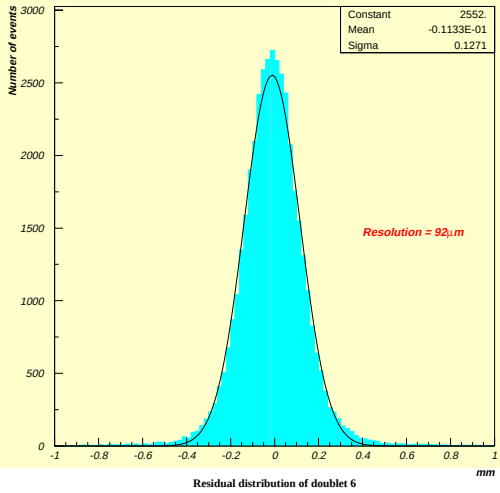

Doublet resolution ≈ 92 μm
(close to theoretical limit)

Fiber Tracker

- **Calibration**
  - **use blue light through fiber cladding**
  - **blue LEDs**
  - **fiber optic panel**

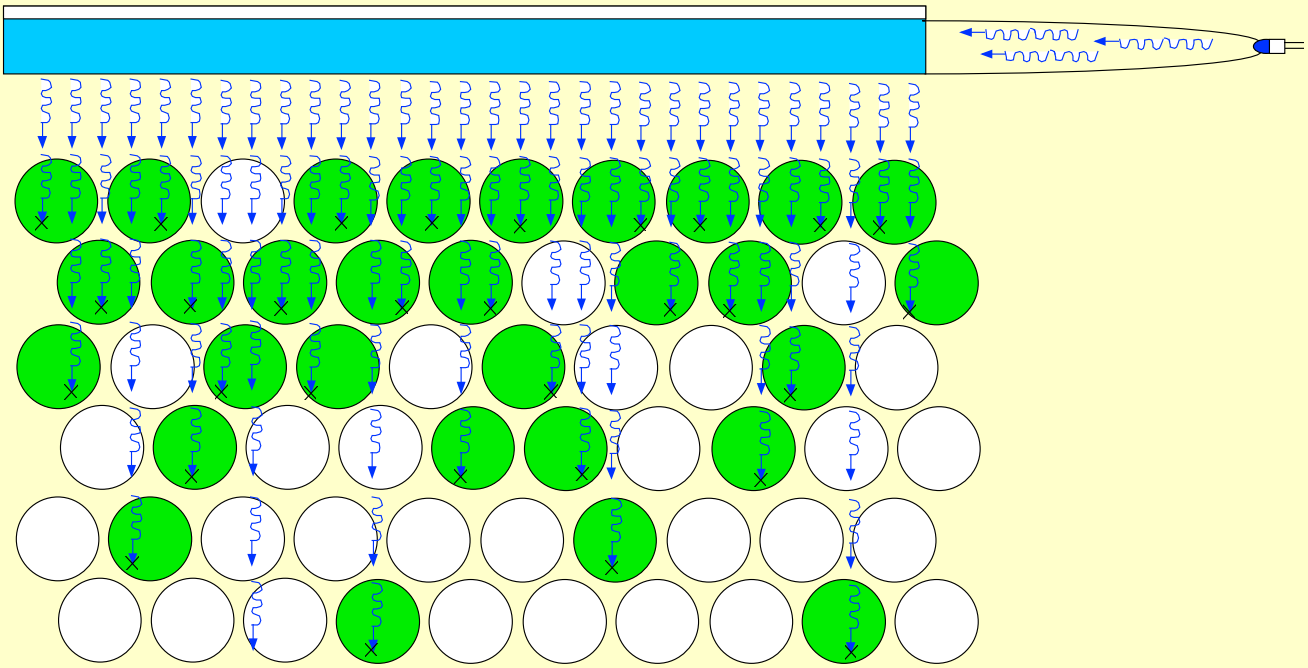

Tracker Performance

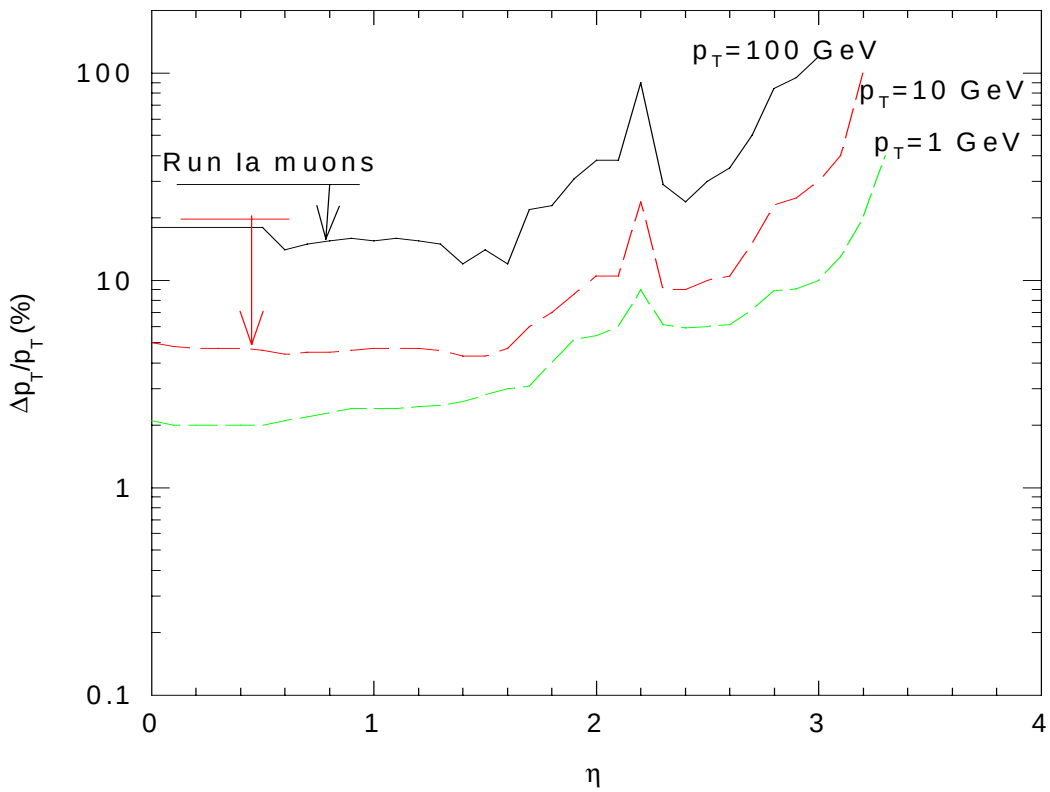

- **Fiber Tracker**
  - **improved μ momentum resolution**
  - **determine sign of charge**
  - **trigger on track p_T**
- **Silicon Vertex Detector**
  - **measure z of interaction vertex**
  - **resolve multiple interaction vertices**
  - **detect secondary vertices**

Conclusions

- **The D0 Upgrade builds on the good features of the present D0 detector (calorimeter, hermeticity, coverage)**

- **Addition of high precision tracking system will enhance the physics capabilities of the D0 detector.**

- **All systems are designed to run at high luminosity ($2*10^{32}$) and reduced bunch spacing (132ns).**

- **Looking forward to exciting physics (discovery, precision measurements….). The upgrade is well underway and matched to the schedule determined by the Main Injector project**

(1999)