CHAPTER 9

CONTROL AND INSTRUMENTATION

9.1 Overview

An existing Texas Instruments TI565T Programmable Logic Controller [1] (PLC) provides control and monitoring of the liquid argon cryogenics system, three detector gas systems, and all of the cryogenic subsystems (e.g. vacuum, compressed air, the Oxygen Deficiency Hazard warning system, and the glycol cooling system) of the existing DØ detector. The PLC provides automatic control and operator manual intervention for all controlled elements as desired, and graphical display and data logging of all monitored parameters when required. The system will be expanded to control and monitor the VLPC, solenoid, and helium refrigerator systems.

A Texas Instruments TI555 PLC will be added to the existing PLC system to control and monitor the magnet power supply and protection switch and to log fast and slow data from the magnet instrumentation. A hardwired chassis and logic unit making up a quench protection monitor (QPM) will provide primary quench protection for the magnet.

A variety of instrumentation and sensors from the magnet and refrigeration system provide signals for the PLC's and the hardwired protection unit.

9.2 Existing PLC System

The existing DØ PLC system is a stand alone system with an internal battery backed program memory which requires no host system to download the control programs in the event of a power failure. It consists of two independent TI565T processors operated in a "hot backup" configuration. One PLC is on line and actively controlling the system; the second is in standby running step for step with the on line unit but with its input/output communication disabled. Each PLC runs continuous internal diagnostics for errors. When a fatal error is registered by the active PLC, the hot backup option takes it offline and puts the standby PLC online without intervention or disruption to the system. The existing control system configuration is shown schematically in Figure 9.1, with added elements for the magnet system, the VLPC system, and the helium refrigerator indicated. The specifications for the TI565T are given in Table 9.1.

9.2.1 PID Loop Control

The TI565 PLC is provided with 64 preconfigured feedback PID (proportional, integral, differential) process control loops. The 25 existing loop assignments plus those to be added

for the VLPC system, the helium refrigerator, and the magnet are shown in Table 9.2. The PLC is capable of advanced control loop features such as feed forward or cascade control if needed.

9.2.2 DMACS

Distributed Manufacturing and Control Software (DMACS) is the operator control interface software for the PLC. DMACS provides the graphical control environment through which operators can monitor and control any process variable I/O connected to the PLC and defined in its data base. Floating-point math and high level programming with the Special Function programming language are available. All control interfaces and menus are password protected by DMACS to prevent unauthorized operation of the systems to which they pertain. The specifications for the DMACS system, and the tasks supported by DMACS at DØ are presented in Table 9.3.

9.3 System Instrumentation

The VLPC system, the helium refrigeration system, and the magnet system will add a substantial number of channels of instrumentation which will be monitored by the upgraded PLC; certain of these channels will also be monitored by the hardwired QPM. That required for the VLPC system is not considered further herein. For the helium refrigeration system, magnet system, and magnet energization system a number of device types will be present, including valve position transducers, temperature sensors, voltage taps, expansion engine speed sensors, flow rate sensors, and vapor pressure and absolute pressure devices.

9.3.1 Thermometry

The helium refrigeration system and the magnet system will utilize three different types of thermometry devices: platinum [2] and carbon-glass [3] RTD's, and VPT's [4]. The RTD's can be accessed directly by the PLC; The VPT's will require a pressure transmitter to interface to the PLC.

An extensive set of RTD thermometry is required for the magnet coil and cryostat, and for the helium subcooler reservoir and vapor cooled leads in the magnet control dewar. Much of the thermometry in the magnet cryostat is provided to monitor cooldown, to verify the performance of the radiation shield and cold mass support systems, and to provide for the permit to charge up the magnet or to trigger a discharge in the event abnormal temperatures are detected. The thermometry in the control dewar is provided to assist cooldown and to protect the vapor cooled leads by detecting abnormalities. Table 9.4 presents the thermometry list of the TI565T for the magnet system.

Temperature sensors are provided for the power supply water cooled diodes to ensure that they are operating properly. Temperature sensors in the balance of the energization system are provided to indicate proper conditions prior to energization of the magnet.

9.3.2 Potential Taps

Potential taps on the magnet coil and superconducting buses, vapor cooled leads, and remainder of the energization system are required to safely operate the system. A coil center tap plus taps at each input bus of the magnet, plus one additional tap at the quarter point on one half of the coil comprise the potential taps for the magnet. Bridge configurations which compare the voltage unbalances between various portions of the coil will signal the presence of a normal zone and generate a quench detection trigger. Additional potential taps are required at the top and bottom of the vapor cooled leads and on the reversing switch, protection resistor, and power supply to provide additional monitoring of the status of the these components. Additional details concerning the energization system are presented in Chapter 10.

9.3.3 Other Sensors

The balance of the helium refrigeration system will provide valve position sensors, pressure transducers, flowrate meters, and expansion engine speed indicators. Many of these are implicit in the PID loop assignments of Table 9.2.

9.4 Upgraded PLC System

Because of planned available unused capacity in the existing TI565T PLC system, the control of the helium refrigerator system and the magnet cryogenics will be added to it. To provide for dedicated monitoring of the magnet energization and protection system a Texas Instruments TI555 PLC will be added to the system.

9.4.1 Helium Compressors

The helium compressor skid packages to be installed in the annex to the DØ Tevatron compressor building are provided with all of the local controls required to run and protect the compressors. During normal operation these units are controlled by the Tevatron as required and the DØ helium refrigerator merely utilizes the needed medium pressure helium mass flow from the Tevatron supply header and returns low pressure gas to the Tevatron suction header without active control or monitoring of the compressor system.

During stand-alone operations at DØ when the Tevatron is not operating one or two of the compressors in the annex will be operated by the DØ PLC via the existing Tevatron ACNET control system. The TI565T PLC will provide the PID control loops and logic to

operate the compressor-associated valves which load or unload the DØ compressor(s); it will also monitor all the signals required to run and monitor the compressor(s). The PID control loop list shown in table 9.2 has entries reserved for these functions.

9.4.2 Magnet Cryogenics System

The control of the magnet cooldown valving and that required for steady state operation will be done by the TI565T PLC. Flow temperatures, helium level, and flowrates are monitored and controlled for the magnet. Entries for the added required PID loops are reserved in Table 9.2.

9.4.3 Dedicated PLC and Magnet Power Control

Because it it desirable to log data from the magnet potential taps at high rates in the event of a quench a dedicated TI555 PLC will be added to the existing control system and assigned these tasks. The specifications for the TI555 PLC are the same as those in Table 9.1 for the TI565T except that it provides 1024 I/O channels, 32768 internal relays, 192 kbytes of battery-backed memory, and 0.07 ms/K word Boolean execution speed. The TI555 will provide a data acquisition rate of 20 Hz for the magnet, bus, and lead voltages to permit the useful logging of these signals. A buffer can continuously retain the last several seconds of these signals so that the most recent buffer of fast data can be logged in the event of a quench. All data is logged continuously at slow rates for the purposes of operator monitoring, trending, etc.

The added TI555 PLC can verify quench detection signals (thereby backing up the hardwired chassis), and it will facilitate the operation of the power supply and reversing switch provided that all appropriate interlocks defined by the hardwired system permit it to do so. Under no circumstances can the PLC system disable the hardwired protection/ interlock chassis. An overview of the solenoid power control circuit is shown in Figure 9.2.

9.5 Quench Protection Monitor

A quench protection monitor (QPM) hardwired chassis and interlock logic unit will provide primary quench detection for the magnet. This unit will contain the necessary filtering, signal averaging, and delay circuitry for the potential taps and thermometry which are incorporated in the quench detection logic, vapor cooled lead fault detection or power supply failure logic. It contains the preset limits for these selected sensors which trigger fast discharge of the magnet, and it preserves the time ordering of the detected fault signals which trigger magnet discharge.

The list of conditions that will trigger a fast discharge of the magnet are given in Table 9.5. A fast discharge that is not initiated by a quench will rapidly lead to a quench. The

conditions that will trigger a slow discharge of the magnet are given in table 9.6.

The QPM defines a set of interlock conditions that must be satisfied before the magnet can be energized or the reversing switch operated. These interlock conditions are summarized in table 9.7. The cryogenics "summation" in Table 9.7 consists of a summing of conditions pertaining to the cryogenics system: helium dewar level sufficient, helium pressure and flow rate sufficient, vapor cooled leads flow and voltage drop proper, control dewar inventory sufficient, etc.

9.6 Control System Power

DØ cryogenic controls are currently powered by a 10 KVA Uninterruptable Power Supply (UPS) which is backed up by an automatic diesel power generator. Present consumption is approximately 3 KVA, leaving 6-7 KVA available. The magnet-related control system including the added PLC and hardwired chassis is expected to add 3 KVA.

References

[1] Texas Instruments Industrial Controls, Pyramid Controls Inc., 470 Irmen, Addison, Ill 60101. The TI PLC's carry UL approval; FM approval for Hazardous locations Div 2, class 1, Groups A,B,C,D; CSA certification; Environmental and noise ratings conform to IEC65/WG5A.

[2] Lakeshore 100 Ohm 4 wire calibrated platinum resistors, Lakeshore Cryotronics, 64 East Walnut St., Westerville, Ohio 43081. Accuracy 0.1 Kelvin 73 – 325 K.

[3] Lakeshore 500 Ohm 4 wire calibrated carbon-glass resistors, Lakeshore Cryotronics, 64 East Walnut St., Westerville, Ohio 43081. Accuracy 0.05 Kelvin 4 – 100 K, insensitive to magnetic field.

[4] Helium vapor pressure thermometers are provided in several standard locations on the STAR refrigeration system including the expansion engines and the heat exchanger. They are useful from 4 to 50 K.

Table 9.1: DØ TI565T PLC Specifications	
Available	In Use
8192 I/O Channels	1024
64 PID Control Loops	25
50,000 Internal Control Relays	1024
Hot Backup (2 PLC's running in tandem)	Yes
352K of memory	96K
1.5 ms/1K Boolean execution	Yes

Table 9.2: TI PLC PID Control Loop List	
Loop ID	Description
1-25	Existing Calorimeter control loops
26-41	Reserved for VLPC
42	Mycom 1st stage slide valve
43	Mycom interstage slide valve
44	Compressor bypass valve (discharge to suction)
45	Lsuc (storage to suction)
46	Hsuc (discharge to storage)
47	EVX1 (HX1 flow control)
48	EVX2 (HX2 flow control)
49	HX LN2 fill
50	EVLP (LN2 splitter)
51	Dry engine speed control
52	Wet engine speed control
53	EVJT (JT valve)
54	EVBY (bypass valve)
55	He dewar pressurizing valve
56	Magnet He supply flow control
57	LHe Control dewar return flow
58	Magnet cooldown valve
59	EVNI N2 intercept/shield flow control
60	EVNS N2 intercept/shield flow control
61	Current lead 1 flow control
62	Current lead 2 flow control

Table 9.3: DMACS Specification and Tasks	
Item	Specification
1	Supports DOS (at DØ) or VAX platforms
2	Database max size is dependent on RAM memory
3	Graphic storage dependent on hard drive capacity
4	All nodes networked (via IBM Token Ring at DØ)
Item	Tasks
1	Display real time process data in graphic format
2	Operator control of processes
3	Process alarms
4	Historical data storage and archiving
5	Communications to all PLC's
6	Networking to all DMACS nodes (distributed control)
7	Trend data display of processes

Table 9.4: DØ Magnet Temperature Sensors		
Point	Sensor	Description
1	Carbon-Glass	Control Dewar Helium Supply
2	Carbon-Glass	Magnet Helium Supply
3	Carbon-Glass	Magnet Helium Return
4	Carbon-Glass	Control Dewar Helium Return
5	Carbon-Glass	Storage Dewar Helium
6 11	Carbon-Glass	6 Magnet Coil Points
12 17	Carbon-Glass	6 Support Cylinder Points
18 35	Carbon-Glass	18 Magnet Supports at Coil
36 53	Platinum	18 Magnet Supports at Intercept
54 55	Platinum	2 End Radiation Shields
56 57	Platinum	2 Inner Radiation Shield
58 59	Platinum	2 Outer Radiation Shield
60 61	Platinum	Shield LN2 Supply & Return
62 63	Platinum	2 Intercept LN2 Supply & Return
64 65	Platinum	2 Vapor Cooled Leads Warm Ends
66 67	Carbon-Glass	2 Vapor Cooled Leads Cold Ends
68 70	Platinum	3 Outer Vacuum Shell

Table 9.5: Fast Discharge Conditions	
System	Signal
Magnet	1. Unbalance Voltage Trigger 2. Excessive Vapor Cooled Lead Voltage
Power Supply	1. Excessive Diode Temperature
Control	1. Power loss to Hardwired Chassis 2. Power loss to any control component
Manual	1. Operator initiated discharge

Table 9.6: Slow Discharge Conditions	
System	Signal
Magnet	1. Magnet Current high 2. Excessive Ground Fault Current 3. Vapor Cooled Lead Flow Inadequate 4. Cryostat Vacuum Pressure High 5. Lead Guard Vacuum Pressure High 6. Radiation Shield Temperature High
Power Supply	1. Loss of Primary 3Φ Power 2. Cover Open in Energization Circuit Enclosures 3. Water Cooled Bus Temperature High 4. Reversing Switch or Filter Choke Temperature High 5. Protection Resistor Temperature High
Cryogenics	1. Solenoid Cold Mass Temperature high 2. Control Dewar Helium Level Low 3. Helium Supply Temperature High 4. Helium Supply Dewar Low 5. Helium Pressure High in Solenoid 6. Helium Flowrate Low in Solenoid
Control	1. PLC Abnormal 2. UPS battery Low 3. QPM Chassis Abnormal
Manual	1. Operator initiated command

Table 9.7: Interlock Conditions	
Power Supply Operation	
Item	Condition
1	Buswork covers on and doors closed
2	Protection resistor temperature low
3	Master chassis key enabled
4	QPM status normal and reset
5	Fast discharge switch closed
6	Operator command "on"
7	Reversing switch key "disabled"
8	UPS status normal
9	PLC's normal
10	3Ø power available to Power Supply
11	Magnet temperature $\geq$ 6 Kelvin
12	Magnet Cryostat Vacuum normal
12	Cryo "summation" normal
13	Warm current bus temp "normal"
Reversing Switch Operation	
Item	Condition
1	Master Power Supply Key disabled
2	Magnet current minimal
3	Magnet voltage zero
4	Power supply off
5	Power supply voltage zero

D0 CRYOGENIC CONTROL CONFIGURATION

(*DARKER LINES REPRESENT EXISTING SYSTEM)

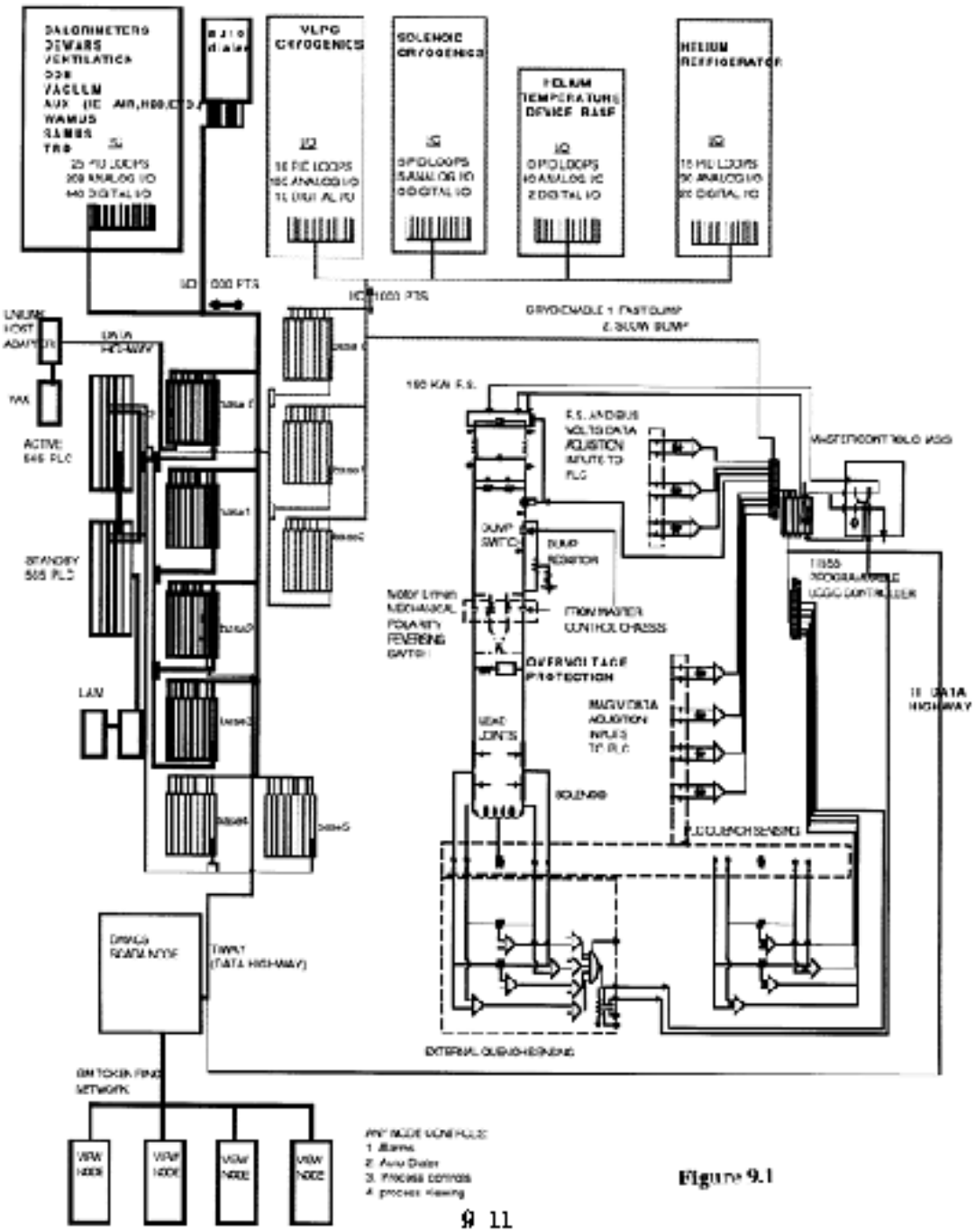

Figure 9.1

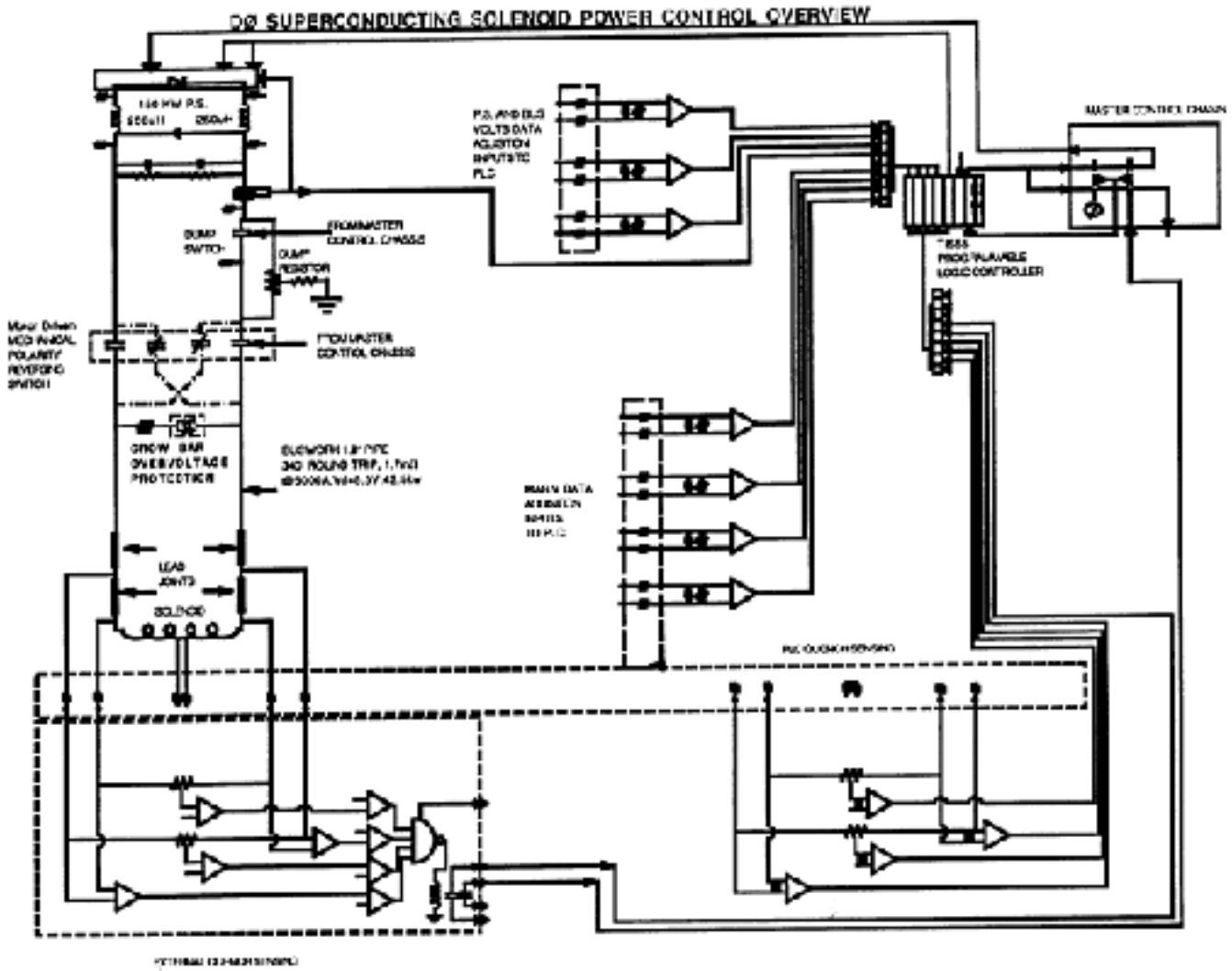
DØ SUPERCONDUCTING SOLENOID POWER CONTROL OVERVIEW
DUMP SWITCH
DUMP RESISTOR
SOLENOID

FIGURE 9.2