Rev.	Date	Description
B	06/09/98	ADDED PLATING LINK TO PRIORITY_PASS NET, MODIFIED COMPONENT VALUES.

SECONDARY CIRCUIT COMPONENTS

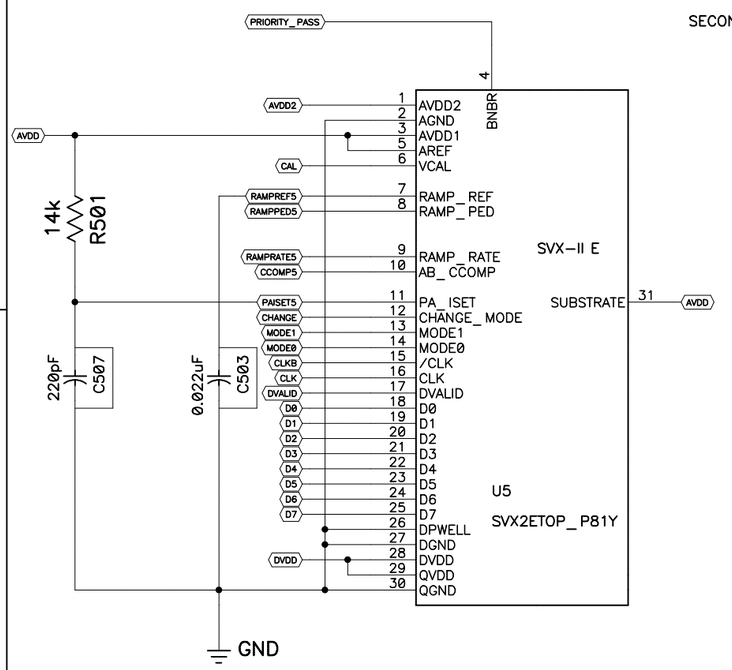

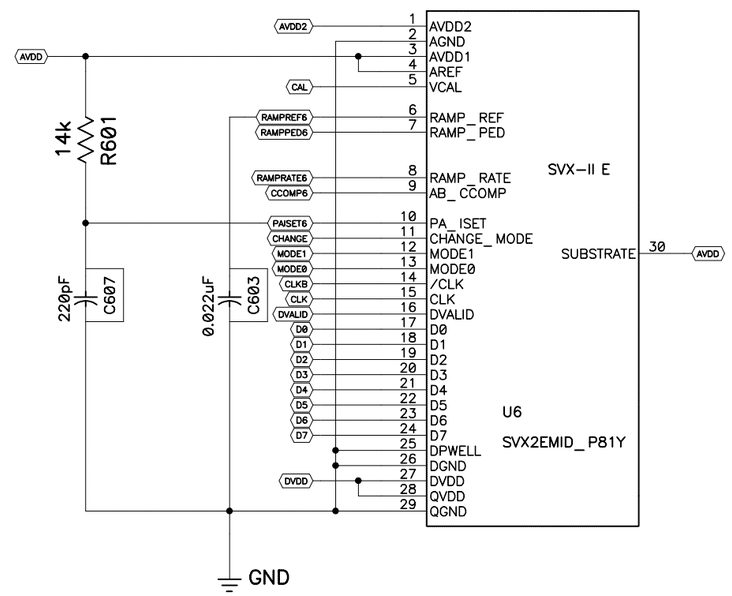

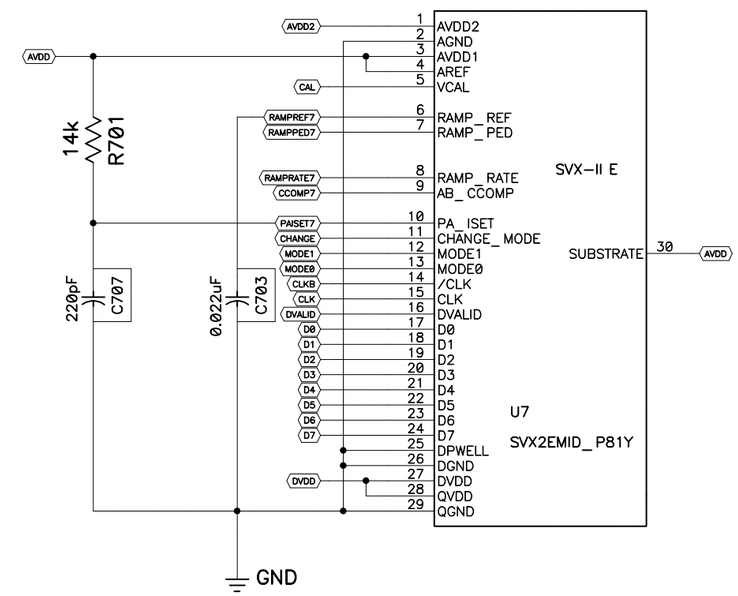

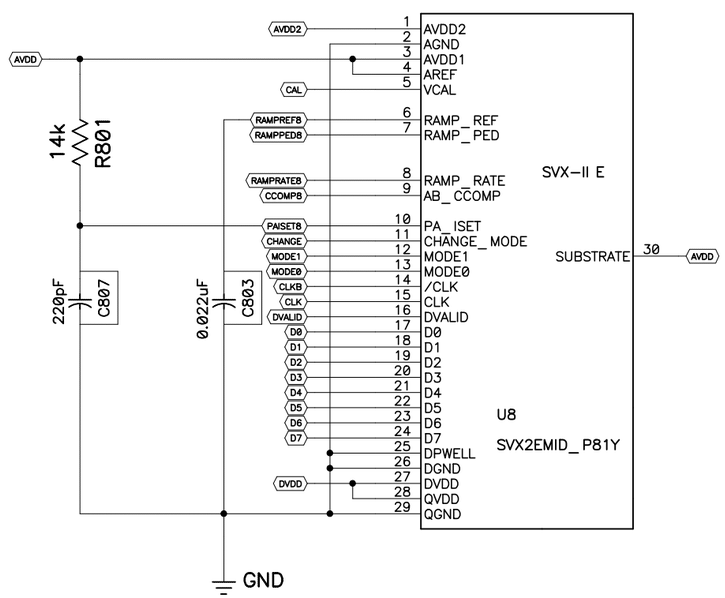

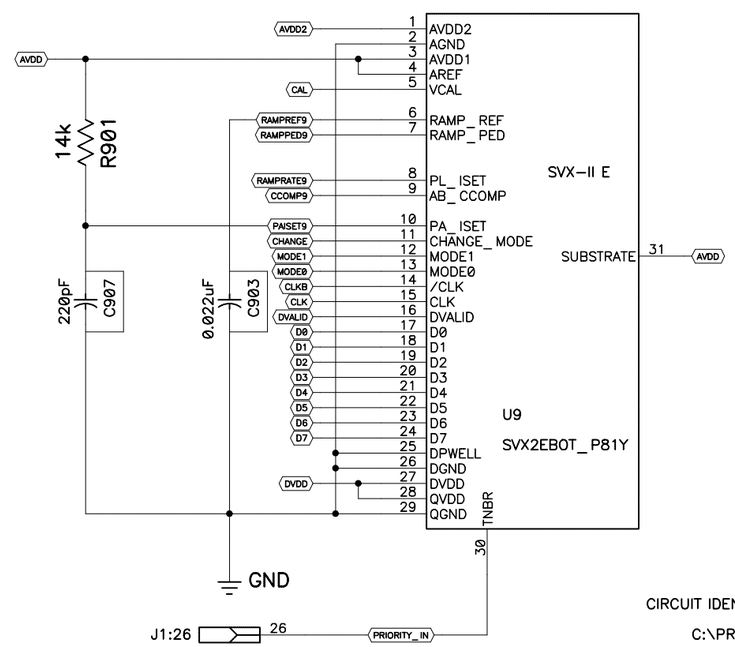

CIRCUIT IDENTIFICATION NUMBER: 3952

C:\PROJECT\SILICON\HDI\3952

ITEM	PART NUMBER	DESCRIPTION OR SIZE	QTY
PARTS LIST			

UNLESS OTHERWISE SPEC.			ORIGINATOR	M. Matulik	08/21/97
FRACTIONS	DECIMALS	ANGLES	DRAWN	M. Matulik	08/21/97
			CHECKED		
Mon May 24 1999 16:28:53			APPROVED		
			USED ON		
			MATERIAL		

FERMI NATIONAL ACCELERATOR LABORATORY

UNITED STATES DEPT. OF ENERGY

9 Chip Barrel HDI: Long Left Hand Tail

SCALE	FILMED	DRAWING NUMBER	Sheet 2 of 4	REV.
		3823.112-EB-330153		B