Rev.	Date	Description
B	06/09/98	ADDED PLATING LINK TO PRIORITY_ PASS NET, MODIFIED COMPONENT VALUES.

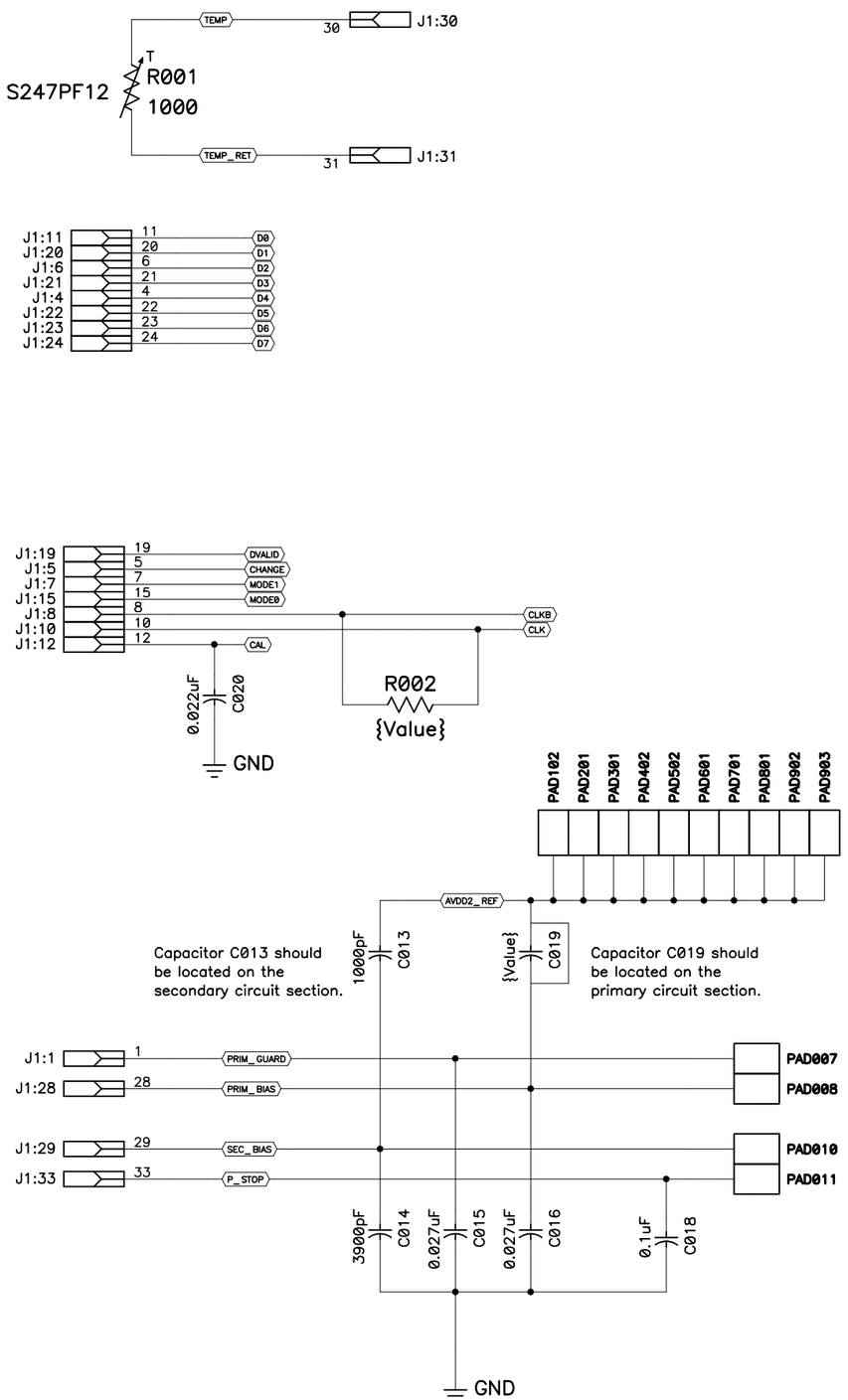

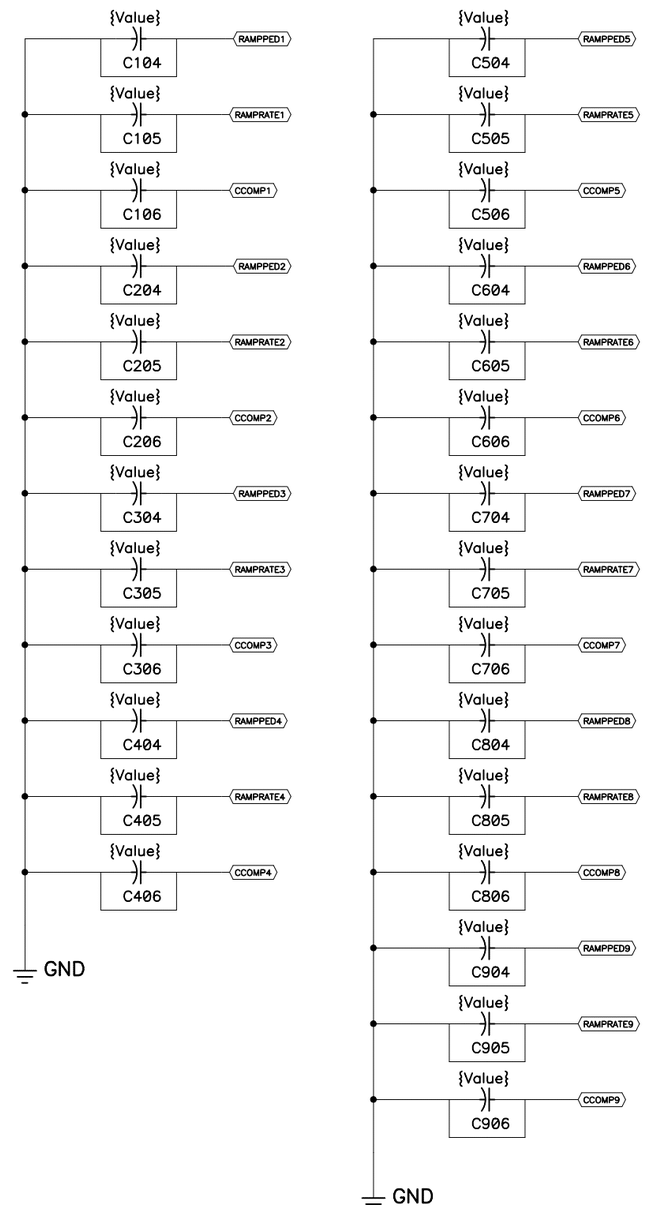

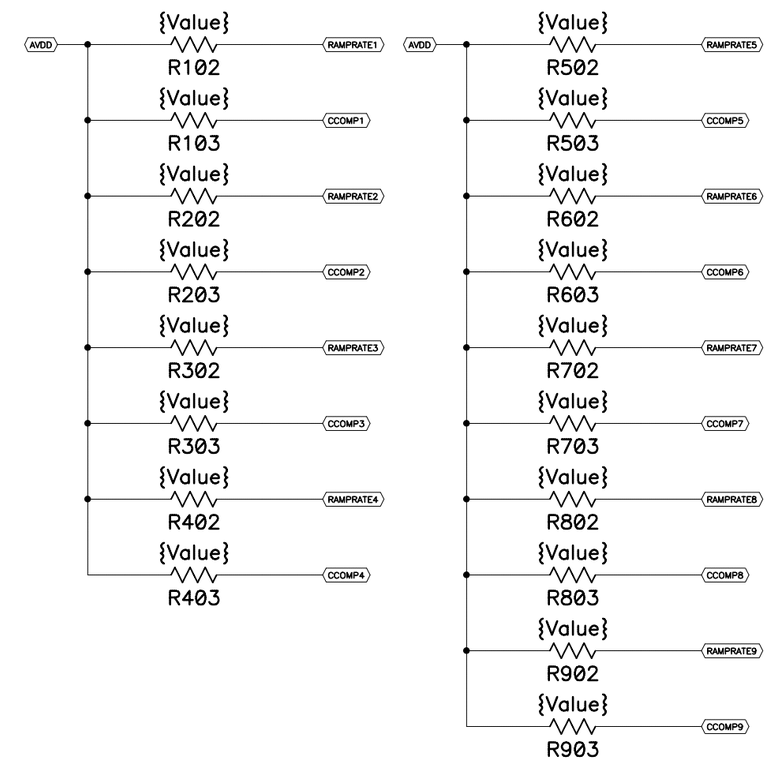

Components shorted with a dashed line indicate areas on the printed circuit board which require a trace on the plating link layer.

ITEM	PART NUMBER	DESCRIPTION OR SIZE	QTY
		PARTS LIST	

UNLESS OTHERWISE SPEC.			ORIGINATOR	M. Matulik	08/21/97
FRACTIONS	DECIMALS	ANGLES	DRAWN	M. Matulik	08/21/97
			CHECKED		
Mon May 24 1999 16:29:06			APPROVED		
			USED ON		
			MATERIAL		

FERMI NATIONAL ACCELERATOR LABORATORY
UNITED STATES DEPT. OF ENERGY

9 Chip Barrel HDI: Long Left Hand Tail

CIRCUIT IDENTIFICATION NUMBER: 3952
C:\PROJECT\SILICON\HDI\3952

SCALE	FILMED	DRAWING NUMBER	Sheet 3 of 4	REV.
		3823.112-EB-330153		B